sesino

HEAT EXCHANGING EXCELLENCE SINCE 1919

AIR OIL HEAT EXCHANGERS BC WITH INTEGRATED BY-PASS VALVE

SCAMBIATORI ARIA/OLIO SERIE BC CON VALVOLA DI BY-PASS INTEGRATA

BY-PASS VALVE OPERATING PRINCIPALE

The new BC line can be equipped with an integrated by-pass valve.

It is available on the following types: BC 250, BC 250/2, BC 390, BC 390/2 e BC 390/3

The operating principle of the by-pass valve is the following: the valve is inside the lower tank, front of the oil-inlet connection; when the pressure inside the tank exceed the load spring pressure, the valve opens allowing the oil to circulate into a duct obtained inside the cooling element side instead of inside the cooling element itself.

The use of the by-pass valve is useful most of all during the cold start in winter season and, when the oil flows inside the exchanger are variable.

The standard load pressure is 4 bar, but different loads are available upon request.

FUNZIONAMENTO VALVOLA BY-PASS INTEGRATA

La nuova serie BC può essere fornita anche con valvola di by-pass integrata.

La valvola di by-pass può essere applicata sui seguenti modelli: BC 250, BC 250/2, BC 390, BC 390/2 e BC 390/3

Il principio di funzionamento è il seguente: La valvola è inserita nella vasca inferiore, di fronte al raccordo di entrata olio; quando la pressione all'interno della vasca supera la pressione di taratura della molla, la valvola si apre facendo circolare l'olio in un condotto ricavato su un fianco del radiatore invece che all'interno del radiatore stesso.

L'utilizzo della valvola di by-pass è utile soprattutto negli avviamenti a freddo durante la stagione invernale e quando le portate olio circolanti nello scambiatore sono molto variabili.

La pressione di taratura standard è di 4 bar; tarature diverse possono essere fornite su richiesta.

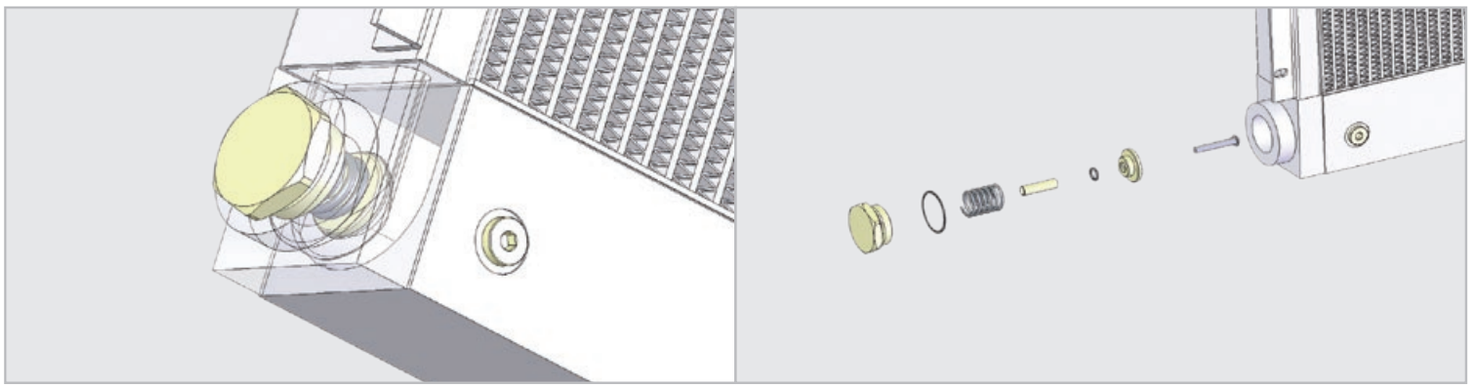

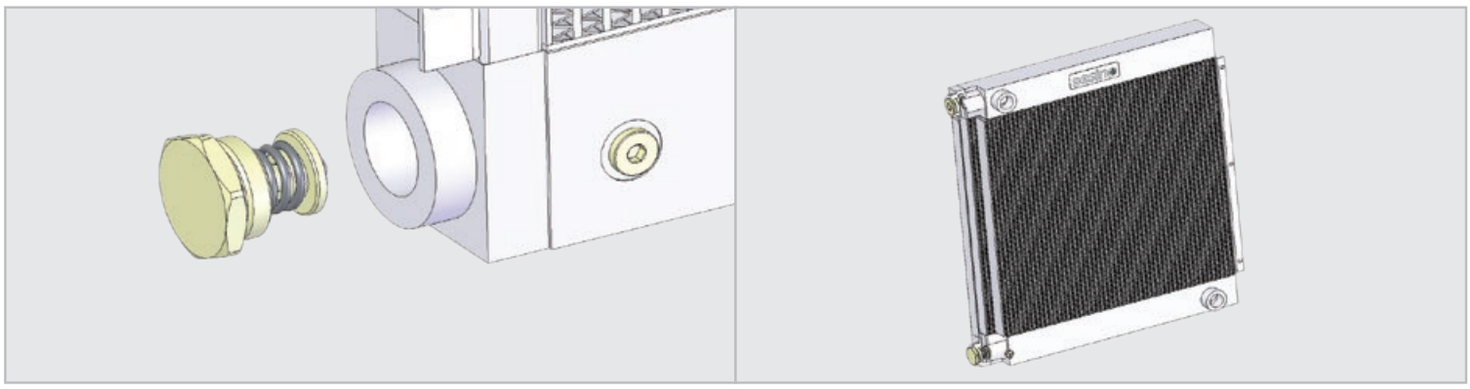

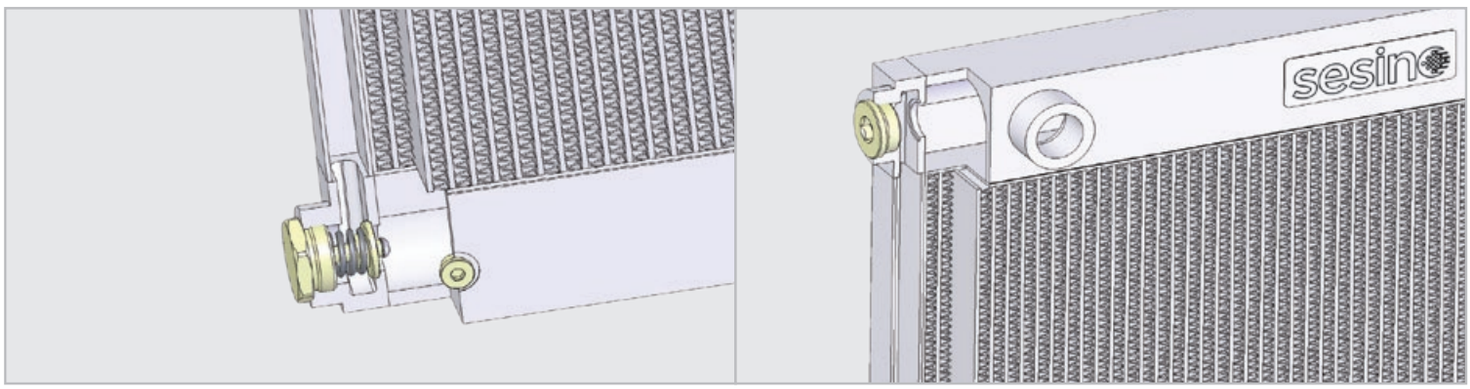

OUR PHILOSOPHY
FILOSOFIA AZIENDALE

SESINO philosophy has its grounding on the following principles.

1. **Full quality**, meant to be product's quality, assistance and organization quality, quality of our raw materials and our measuring and checking instruments, everything according to ISO 9001:2008 Regulation.

2. **Occupational safety**, a commitment to our staff, in order to grant them no risks while working. A policy for which we obtained BS OHSAS 18001:2007 Certification.

3. **Proactive Skills**, Sesino aptitude to support and cooperate with customers in order to optimize the development of their projects. SESINO can offer custom-made products, produced according to our client's needs, using our experience, knowledge, human resources and technology.

4. **Competitiveness**, which means to be able to face our competitors and believe that we can succeed. This feature is the result of corporate growth, increase in the sales volume, expense reduction and the possibility to invest in technology and marketing research.

La filosofia aziendale della SESINO pone le sue basi sui seguenti fondamenti.

1. ***Qualità totale**, intesa come qualità del prodotto, qualità del servizio, qualità dell'organizzazione, qualità degli strumenti di controllo, qualità delle materie prime, ma non solo a parole, bensì certificata secondo le norme ISO 9001:2008.*

2. ***Sicurezza sul lavoro**, un impegno che ci siamo assunti nei confronti di tutti i nostri collaboratori perché possano lavorare senza rischi di incidenti, anche qui, non solo a parole, bensì certificata secondo la Norma BS OHSAS 18001:2007*

3. ***Capacità propositiva**, intesa come un preciso impegno della SESINO a essere vicina in modo particolare ai costruttori allo scopo di collaborare con gli stessi per l'ottimizzazione e lo sviluppo dei loro progetti. È inoltre una caratteristica produttiva della SESINO quella di poter offrire prodotti fuori standard, costruiti in funzione delle specifiche esigenze della clientela; questo naturalmente presuppone conoscenza, esperienza, risorse umane e tecnologiche per affrontare e risolvere i problemi.*

4. ***Competitività**, che significa doversi e potersi misurare con tutti gli antagonisti, con la consapevolezza di poter anche essere vincenti. La competitività è senza dubbio il risultato di diversi componenti quali la crescita aziendale, l'incremento del fatturato, il contenimento delle spese, la possibilità di finanziare investimenti tecnologici per la ricerca, per il marketing e così via.*

Quality Management System

Occupational Health and Safety Assessment Series

HISTORY
STORIA






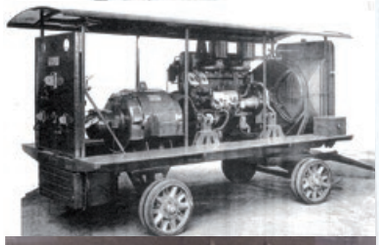
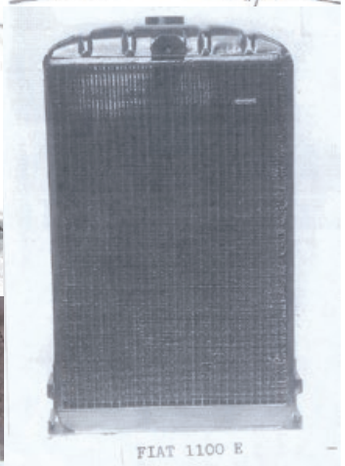

SCAMBIATORI DI CALORE ACQUA/OLIO PER OLEODINAMICA

FIAT 1100 E


1919

The Sesino brothers founded the company F.lli Sesino & C., having as its main activity the production and maintenance of grills and radiators for vehicles. *I fratelli Sesino costituiscono la F.lli Sesino & C., avente come attività la costruzione e riparazione di mascherine e radiatori per automobili.*

1920

F.lli Sesino & C. took part into the first Exhibition in Milan and got several statements and rewards for its activity.
La F.lli Sesino & C. partecipa alla prima FIERA DI MILANO e ottiene attestazioni e riconoscimenti per l'attività svolta.

1922

F.lli Sesino & C., after having received a big order for the production of car radiators from company Edoardo Bianchi, moved from the old workshop to the new place in Via Noè, Milan. Until the II World War, the company got several orders for grills and radiators from Bianchi and FIAT. Then, in the new site began the production of gas and electric unit heaters, condensers and evaporators for the first refrigerating systems. *La F.lli Sesino & C., acquisita una fornitura di radiatori per la casa automobilistica EDOARDO BIANCHI, si trasferisce dalla bottega artigiana degli esordi in una nuova sede in Via Noe a Milano. Fino allo scoppio della seconda guerra mondiale, vengono acquisiti ordini per forniture di mascherine e radiatori, oltre che dalla EDOARDO BIANCHI, dalla FIAT. In questa nuova sede inizia la produzione di aerotermi a gas ed elettrici, condensatori ed evaporatori per i primi impianti frigoriferi.*

1934

With the resignation of brother Alfredo the company became Costante Sesino & C. *Con le dimissioni del fratello Alfredo, la Società si trasforma in Costante Sesino & C.*

1945

Finished the II World War, among the several difficulties, Costante Sesino & C. restarted the production of radiators, evaporators and condensers. *Terminata la seconda guerra mondiale, tra le mille difficoltà dei tempi, la Costante Sesino & C. ricomincia a produrre radiatori, evaporatori e condensatori.*

1948

Began the production of radiators for cars, trucks and tractors for the spare parts market. This activity absorbed entirely Costante Sesino production for more than a decade. *Inizia la produzione di radiatori per auto, autocarri e trattori destinata al mercato del ricambio, che occupa la Costante Sesino & C. in maniera esclusiva per oltre un decennio.*

1954

Construction of the new company headquarter in Via Doberdò, Milan, which after further enlargements reached a covered area of 2500 m^2. *Costruzione della nuova sede di Via Doberdò, sempre a Milano che, con vari successivi ampliamenti, raggiunge una superficie coperta di oltre 2500 m^2.*

1955

Against request of a producer of injection presses for plastic material, who was forced to supply in the USA, Costante Sesino & C. started the production of tube-bundle heat exchangers for oil cooling in oleo hydraulic systems. *Su sollecitazione di un costruttore di presse a iniezione per materie plastiche, costretto ad approvvigionarsi degli scambiatori di calore a fascio tubiero negli Stati Uniti, la Costante Sesino & C. inizia la produzione di scambiatori di calore a fascio tubiero per il raffreddamento dell'olio di impianti oleoidraulici.*

1960

Using the experience in the construction of radiators, Costante Sesino & C. began producing air-oil heat exchangers intended to cool mobile and industrial machine's systems, combined radiators for the cooling of water and oil, exchangers for compressors and radiators for power units. *Sfruttando l'esperienza precedente nella costruzione di radiatori, la Costante Sesino & C. inizia la produzione di scambiatori di calore aria-olio destinati al raffreddamento di macchine mobili e industriali, alla costruzione di radiatori combinati per raffreddamento acqua e olio, al raffreddamento di compressori, alla costruzione di radiatori per gruppi elettrogeni.*

1970

The production of radiators for the spare parts market was definitely abandoned in order to concentrate exclusively on the oleo hydraulic market. *Viene deciso di abbandonare la produzione di radiatori per il mercato del ricambio per dedicarsi esclusivamente al mercato oleoidraulico.*

1988

Began the production of aluminium air-oil heat exchangers, which will onwards substitute the brass/copper production. *Inizia la produzione di scambiatori aria-olio in alluminio che andrà progressivamente a sostituire negli anni successivi quella in ottone/rame.*

1999

The Company changed its name in Costante Sesino S.p.A., becoming part of Tognella Group. This event gave the company a fresh new start, granting the possibility to count on cooperation and financial support. This union brought to new investments aimed at improving the company efficiency. *La Società cambia la ragione sociale nell'attuale Costante Sesino S.p.A. ed entra a far parte del Gruppo Tognella . Avrà quindi la possibilità di attingere a nuova linfa vitale, di poter usufruire di tutti quei benefici che derivano dalle sinergie, dalle collaborazioni e dal reciproco sostentamento economico/finanziario. Negli anni successivi vengono effettuati molti investimenti per migliorare l'efficienza produttiva.*

2003

Costante Sesino S.p.A. moved to the current seat in Gessate (Milan): a modern place with a 4000 m^2 producing area and 400 m^2 offices. *Trasferimento della Costante Sesino S.p.A. nell'attuale sede di Gessate in provincia di Milano: si tratta di una moderna sede industriale di oltre 4000 m^2 di superficie produttiva, oltre a 400 m^2 di uffici.*

2009

Introduction of custom-made heat exchangers with different materials and size, addressed mainly to the energy market. *Introduzione di una produzione di scambiatori speciali, destinati al mercato energetico, costruiti con materiali diversi dallo standard, e fornibili con specifiche certificazioni richieste dai clienti.*

2011

Costante Sesino obtained the Centification EN ISO 9001/2008. *Raggiungimento della certificazione di qualità ISO 9001/2008.*

2012

Costante Sesino obtained the OHSAS 18001/2007 Certification for occupational health and safety management system. *Raggiungimento della certificazione OHSAS 18001/2007 per la salute e la sicurezza sul lavoro.*

HEAT EXCHANGING: GENERAL INFORMATION
GENERALITÀ SULLA TRASMISSIONE DEL CALORE

How heat is transferred

The term heat transmission means the processes through which heat is transferred from one body to another or from different points of the same body, because of the presence of temperature differences. The transmission way changes according to the nature of the body.
In a solid body, heat is transferred by conduction, in a liquid by convection, while the third method, radiation, depends on the electromagnetic properties of the bodies involved. This last case is not particularly relevant in the heat exchangers field and thus, only the first two phenomena will be briefly described.

Conduction

Let us suppose to have a flat plate and that the two faces of the plate are in some way kept at two different temperatures: T1 and T2.
There will be a flow of heat from the face with an higher temperature T1 to the one with a lower temperature T2, without any movement of matter. We say that heat is transmitted from one point to another by conduction.

Convection

Now let us consider the case of a body immersed in a fluid. If the temperature of the body is higher than that of the fluid, heat will flow from the former to the latter. Since the temperature of the fluid in contact with the wall is higher than the one of the fluid distant from the wall, a movement is established because of the different densities at the two points. The phenomenon of heat transmission related to this state of motion is called convection.
While conductivity depends exclusively on the material, heat exchange by convection depends on the type of fluid, its condition of motion and the shape of the surface.

General information on heat exchangers and their sizing

Heat exchangers are devices, which allow the exchange of heat between two moving fluids at different temperatures. The two fluids are generally separated by a solid surface, which is usually metal. Heat exchangers can be divided into three groups according to the motion of the two fluids inside.

a) parallel current heat exchanger, when the two fluids move in parallel and in the same direction at all points of the exchanger;
b) counter current heat exchangers, where the two fluids move in parallel but in opposite directions;
c) crosscurrent heat exchangers, where the two fluids move at right-angles to each other.

Sizing a heat exchanger means to calculate the needed exchange surface which is a function of the quantity of heat to dissipate, of the temperatures and the oil flow rates of the two fluids.

Problems regarding oil cooling

The viscosity of oil increases as its temperature decreases. When oil encounters a cold surface in a heat exchanger, it forms an isolating stratum. The thickness of this stratum is inversely proportional to the possibility of heat exchange.
To obtain optimal thermal efficiency, the flow rate of the oil over the exchange surface must be such as to ensure that the thickness of this stratum is as low as possible. In practice, this means that it is essential to ensure that the flow rate of the oil inside the heat exchanger is higher than the minimum indicated on the catalogues.

Sizing of air-oil heat exchangers to be installed on hydraulic system

The technical data required are the same of water-oil heat exchangers, as well as the ambient temperature at which the heat exchanger has to work.
Sizing an air-oil heat exchanger consists, practically, in calculating the needed specific performance, called Kr, and choosing the heat exchanger having the higher specific performance.
$Kr = Q/\Delta T$ where ΔT is the difference between oil inlet temperature and maximum summer ambient temperature, while Q is the quantity of heat to be dissipated which can be easily calculated considering 20-30% of installed power.
To choose the right cooler you must check the diagrams into the technical catalogue.

Example

N = 20 kW
q = 80 lpm
To = 50°C
Tamb = 30°C

Q = 30% 20 = 6 kW = 5.160 kcal/h
ΔT = 50 - 30 = 20°C
Kr = 5.160/20 = 258 kcal/h°C

Drawing a vertical line on the diagram in correspondence with the flow rate 80 l/min, the intersection of this line with the curves gives on ordinates the Kr that each heat exchanger is able to grant in that condition

.

Le vie del calore

Tutti sanno che per "trasmissione del calore" si intendono i processi attraverso cui, a causa di differenze termiche esistenti, il calore si trasferisce da un corpo ad un altro o a punti diversi dello stesso corpo.
Queste modalità, ovviamente, cambiano a seconda che si verifichino in un solido(conduzione), in un liquido (convezione) o per le proprietà elettromagnetiche dei corpi (irraggiamento).
Quest'ultimo caso non riveste particolare rilevanza nel campo degli scambiatori di calore e perciò riteniamo utile accennare solo ai primi due fenomeni.

La conduzione

Supponiamo di avere una lastra piana e di mantenere con qualsiasi artificio le due facce a due temperature diverse: T1>T2. Vi sarà un flusso di calore dalla faccia a temperatura superiore a quella a temperatura inferiore senza movimento di materia; diremo che il calore si trasmette da un punto ad un altro per conduzione.

La convezione

Consideriamo di avere un corpo immerso in un fluido; se la temperatura del corpo è superiore a quella del fluido, vi sarà un flusso di calore dal primo al secondo.
Poiché la temperatura del fluido a contatto con la parete è più alta di quella di un punto lontano dalla parete, si stabilisce un movimento causato dalle diverse densità nei due punti: il fenomeno di trasmissione del calore che è legato a questo stato di moto si chiama convezione.
A differenza della conducibilità che dipende esclusivamente dal materiale, il calore scambiato per convezione trova le sue ragioni, oltre che nel tipo di fluido, nelle condizioni di moto di questo e nella forma della superficie.

Generalità sugli scambiatori di calore e loro dimensionamento

Gli scambiatori di calore sono apparecchi che consentono lo scambio del calore tra due fluidi in movimento a diverse temperature. I due fluidi sono generalmente separati tra loro da una superficie solida, quasi sempre metallica.
Gli scambiatori di calore, in relazione al moto dei due fluidi all'interno dell'apparecchio, si possono dividere in tre gruppi:

a) scambiatori in equicorrente, se i due fluidi si muovono in ogni punto dell'apparecchio parallelamente e nella stessa direzione;
b) scambiatori in controcorrente, se i due fluidi si muovono parallelamente, ma in direzioni opposte;
c) scambiatori a correnti incrociate, se il flusso dei fluidi è ortogonale.

Dimensionare uno scambiatore significa calcolare la superficie di scambio necessaria, che è funzione della quantità di calore da disperdere, delle temperature e delle portate dei due fluidi.

Problemi inerenti al raffreddamento dell'olio

L'olio è un fluido che, con il diminuire della temperatura, aumenta la sua viscosità. Quando in uno scambiatore di calore esso viene a contatto con una superficie fredda, esso forma uno strato isolante il cui spessore è inversamente proporzionale alla possibilità di scambiare calore.
Per ottenere una resa termica ottimale bisogna fare in modo che la velocità di scorrimento dell'olio sulla superficie di scambio sia tale da rendere il più basso possibile lo spessore di tale strato; ciò in pratica si traduce nella assoluta esigenza che negli scambiatori circoli una portata d'olio superiore alla minima indicata sui cataloghi.

Dimensionamento degli scambiatori di calore aria-olio da installare su impianti oleoidraulici

I dati da richiedere sono gli stessi dello scambiatore acqua-olio, oltre, naturalmente, alla temperatura dell'aria ambiente a cui deve funzionare lo scambiatore.
Il dimensionamento dello scambiatore consiste essenzialmente nel calcolo della potenzialità specifica necessaria, chiamata Kr, e scegliere lo scambiatore avente potenzialità specifica immediatamente superiore.

$Kr = Q/\Delta T$, dove ΔT è la differenza tra la temperatura entrata olio e la temperatura ambiente massima estiva e Q è la quantità di calore da disperdere che si calcola considerando il 20-30% della potenza installata.

Per scegliere lo scambiatore idoneo bisogna consultare i diagrammi del catalogo tecnico. Tracciando sui diagrammi una retta verticale in corrispondenza della portata 80 l/min, l'intersezione di tale retta con le curve fornisce in ordinate il Kr che ogni scambiatore è in grado di garantire in quella condizione.

Esempio: N = 20 kW; q = 80 lpm; To = 50°C; Tamb = 30°C

Q = 30% 20 = 6 kW = 5.160 kcal/h
ΔT = 50 - 30 = 20°C
Kr = 5.160/20 = 258 kcal/h°C

La scelta dello scambiatore si esegue utilizzando le curve presenti sul catalogo tecnico. Tracciando una retta verticale in corrispondenza della portata di 80 lpm, l'intersezione con le varie curve di resa fornisce in ordinate il Kr dei diversi scambiatori.

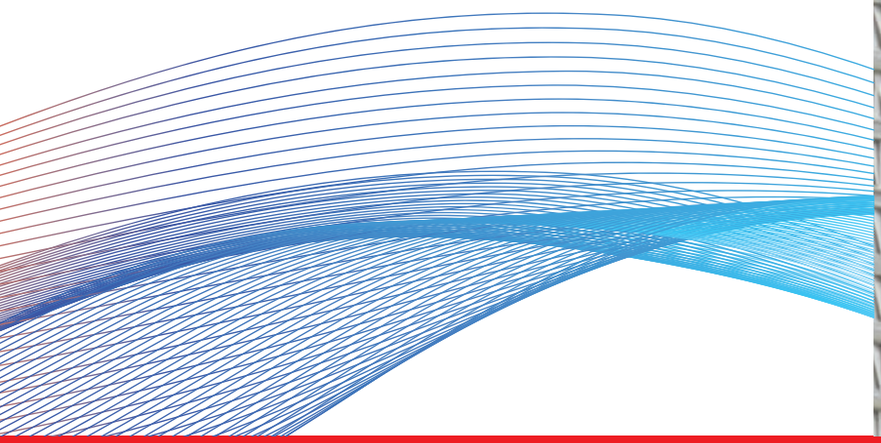

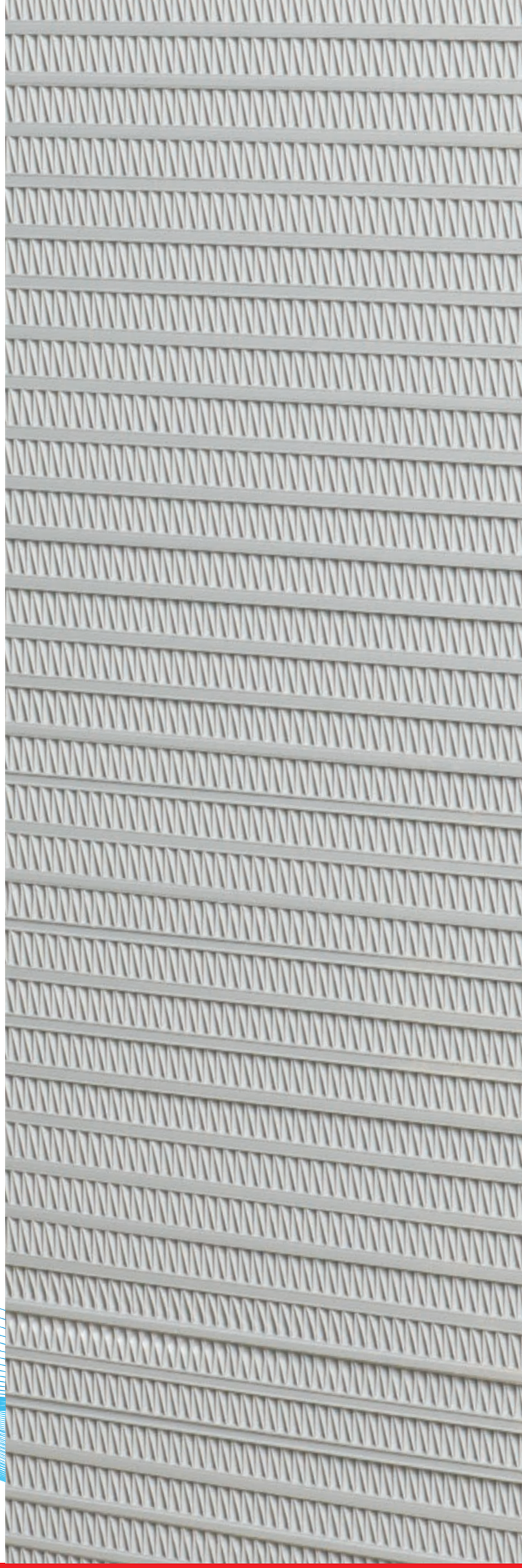

INDEX
INDICE

AIR-OIL HEAT EXCHANGERS BC
SCAMBIATORI DI CALORE ARIA-OLIO SERIE BC

DC MOTOR HEAT EXCHANGERS
SCAMBIATORI DI CALORE A CORRENTE CONTINUA

AC MOTOR HEAT EXCHANGERS
SCAMBIATORI DI CALORE A CORRENTE ALTERNATA

HYDRAULIC MOTOR HEAT EXCHANGERS
SCAMBIATORI DI CALORE CON MOTORE IDRAULICO


62 - 00 94
94
33

AIR-OIL HEAT EXCHANGERS BC
SCAMBIATORI DI CALORE ARIA OLIO - SERIE BC

The advantage of using air into the cooling of oleo hydraulic systems has its bases on the following facts:

- There is no need of water
- The system is independent of the connection to the water main
- Lower working costs in comparison with the water-oil exchangers, even if the starting investment is higher
- Possibility to use warm air to heat the room in winter.

The particular structure of the cooling element allows great thermic performances and pressure resistance.

The difference between this line of products and the standard type AP and APL is the resistance to pressure that, in this case, is a little lower. We therefore believe that with such pressures, the BC line is suitable for many uses into the oleo hydraulic field.

Maximum working static pressure: 16 bar; test pressure: 25 bar.

Innovation in this line is that we can provide a by-pass valve to avoid exceeding counter pressures during the starting of the machine with cold oil.
It is not useful to use a check valve as by-pass to protect the exchanger from pressure's peaks, since the inertia of the valve itself is too high in comparison with the speed of the pressure waves that occur into the oleo hydraulic systems.
The flow rates shown in the tables are the ones recommended for the exchanger proper working.
The efficiency curves show the specific exchange capacity in kcal/h°C or in kW/°C according to the different oil rates. To calculate the heat quantity the different exchangers are able to dissipate it is enough to multiply such capacity by the difference between the requested oil temperature and the summer room temperature.

The Heat Exchanger from the BC line can be equipped as follow:

- **Direct current motor with IP 68 protection degree, IP 67 fixed thermo-switch with integrated relay and, upon request, cooling element with integrated by-pass valve**

- **Alternating current motor, IP 65 fixed thermo-switch and, upon request, cooling element with integrated by-pass valve**

- **Fan driven by hydraulic motor, IP 65 fixed thermo-switch and, upon request, cooling element with integrated by-pass valve**

The air-oil heat exchangers can be used to cool other kind of fluids, which must be compatible with aluminum and its alloys.
However, for each use, with the exception of oil cooling, we recommend to consult our Technical Department.

Il vantaggio dell'utilizzo dell'aria nel raffreddamento di impianti oleoidraulici trova le sue ragioni nei seguenti fattori:

- *Non necessità l'utilizzo di acqua*
- *Indipendenza della macchina dalle tubazioni di allacciamento alla rete idrica*
- *Inferiore costo di esercizio rispetto agli scambiatori acqua-olio, anche se maggiore è l'investimento iniziale*
- *Possibilità di utilizzare l'aria calda in uscita per riscaldare l'ambiente nella stagione invernale*

La particolare costruzione del radiatore consente di ottenere notevoli rese termiche e forte resistenza alla pressione.

La differenza principale rispetto alle serie standard AP e APL è la resistenza alla pressione che è leggermente inferiore. Anche se riteniamo che con queste pressioni si possano coprire notevoli campi di impiego in oleoidraulica

Pressione massima statica di funzionamento: 16 bar; pressione di collaudo: 25 bar.

Un'altra novità che possiamo offrire su questa serie è la possibilità di applicare una valvola di by-pass per evitare eccessive contropressioni soprattutto al momento dell'avviamento della macchina con olio freddo. Non è invece conveniente utilizzare una valvola di ritegno come by-pass per proteggere lo scambiatore dai picchi di pressione in quanto l'inerzia della valvola stessa è troppo alta rispetto alla velocità delle onde di pressione che si sviluppano all'interno dell'olio degli impianti oleoidraulici.
Le portate olio indicate nelle tabelle sono quelle consigliate per il buon funzionamento dello scambiatore.
Le curve di rendimento forniscono la potenzialità di scambio specifica in kcal/h°C o in kW/h°C in funzione della portata olio; per calcolare la quantità di calore che i vari scambiatori sono in grado di disperdere, è sufficiente moltiplicare tale potenzialità per la differenza tra le temperature dell'olio desiderata e dell'aria ambiente massima estiva.

Gli scambiatori della serie BC sono disponibili nelle seguenti versioni:

- ***Con motore a corrente continua protezione IP 68 e termostato taratura fissa protezione IP 67 con relè integrato e possibilità di montare radiatore con valvola di by pass integrata***

- ***Con motore a corrente alternata e termostato taratura fissa protezione IP 65 e possibilità di montare radiatore con valvola di by pass integrata***

- ***Con ventola azionata da motore idraulico e termostato taratura fissa protezione IP 65 e possibilità di montare radiatore con valvola di by pass integrata***

Gli scambiatori aria-olio possono essere utilizzati per raffreddare altri tipi di fluidi, a condizione che essi siano compatibili con l'alluminio e le sue leghe.
Consigliamo comunque, per qualsiasi impiego che non sia il raffreddamento dell'olio, di contattare il nostro Ufficio Tecnico.

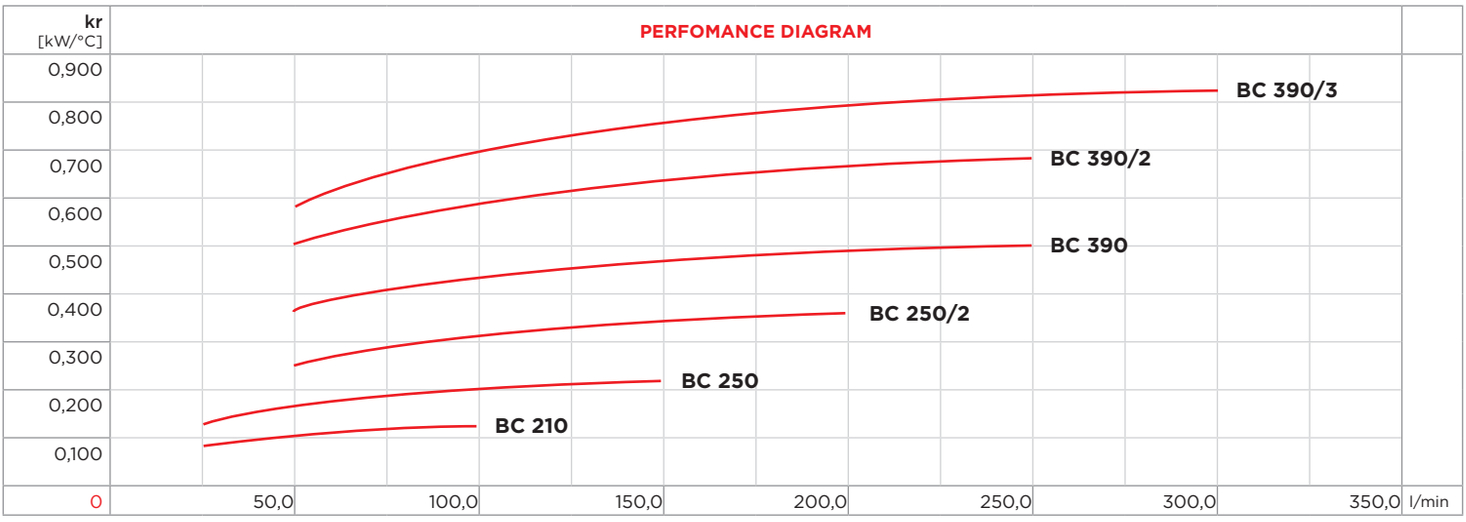

BC 210 12/24V

PURCHASE CODES

BC 210 12/24V without thermo switch	3RBC21012 3RBC21024
BC 210 12/24V with thermo switch	3RBC21012T247 3RBC21024T247 3RBC21012T260 3RBC21024T260

SPARE PARTS

Cooling element	1RO03378
Frame	3CNBC210.1
Electric fan 12V	1MCVA14AP7AC
Electric fan 24V	1MCVA14BP7AC
Thermo-switch 47-36 12V IP 67	1TRM 47-36/12V
Thermo-switch 47-36 24V IP 67	1TRM 47-36/24V
Thermo-switch 60-49 12V IP 67	1TRM 60-49/12V
Thermo-switch 60-49 24V IP 67	1TRM 60-49/24V

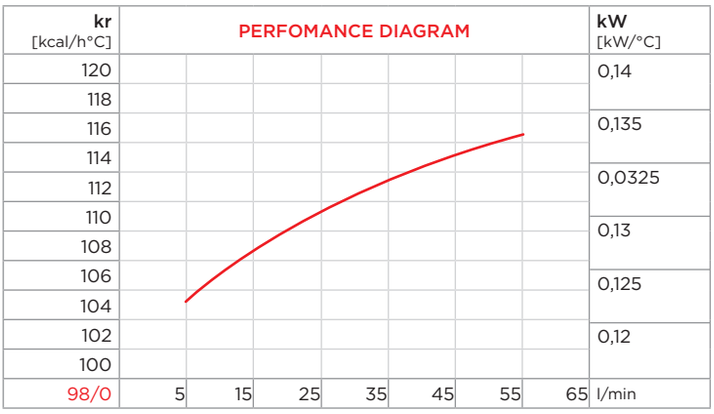

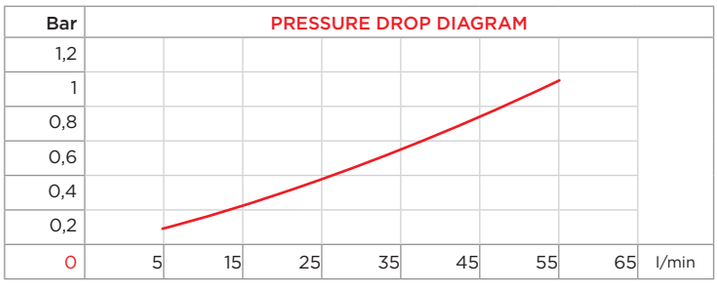

CORRECTION FACTOR							
cSt	22	30	46	68	100	150	220
f	0,6	1	1,5	2,3	3,5	5	7

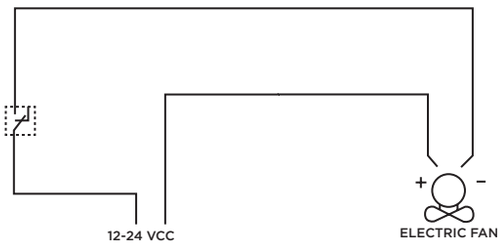

- Dimensions and technical characteristics are not binding

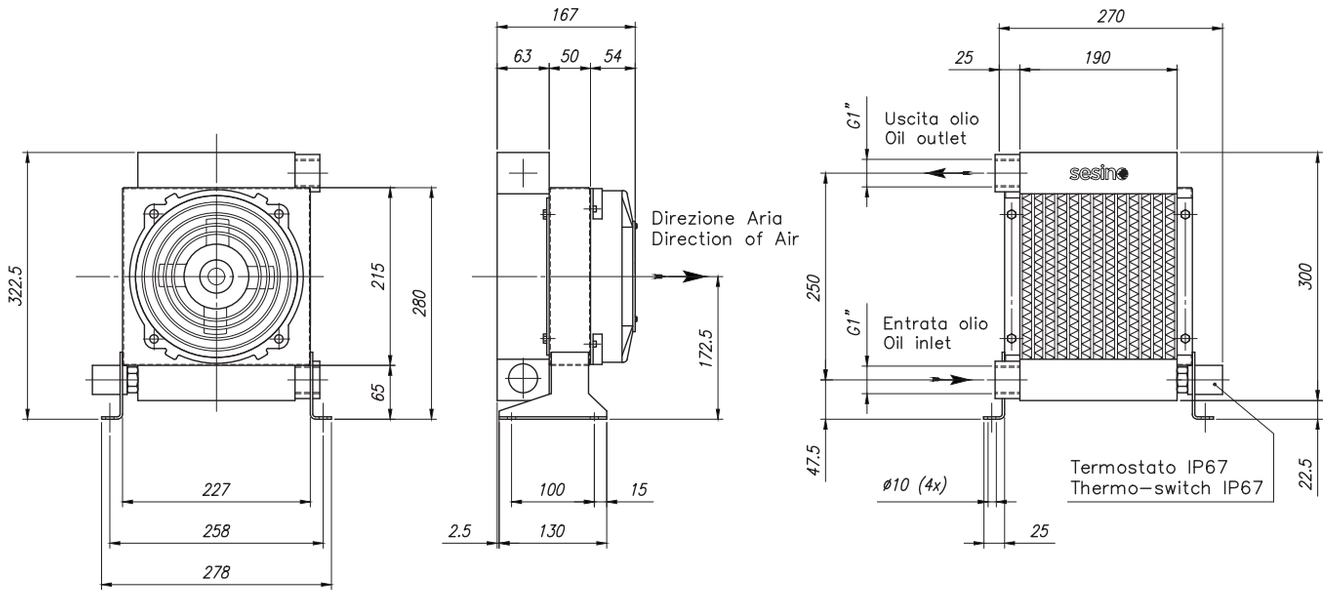

OIL FLOW	VOLTAGE	POWER	CURRENT	AIR FLOW	ELECTRIC PROTECTION	NOISE LEVEL	WEIGHT	ø FAN
l/min	V	W	A	m³/h	IP	dB(A)	kg	mm
10-80	12	65	5,2	500	64	72	5	190
10-80	24	65	2,6	500	64	72	5	190

BC 250 12/24V

PURCHASE CODES

BC 250 12/24V without thermo switch	3RBC25012 3RBC25024
BC 250 12/24V with thermo switch	3RBC25012T247 3RBC25024T247 3RC25012T260 3RBC25024T260

SPARE PARTS

Cooling element	1RO03379
Frame	3CNL300.1
Electric fan 12V	1VNAPL30012C
Electric fan 24V	1VNAPL30024C
Thermo-switch 47-36 12V IP 67	1TRM 47-36/12V
Thermo-switch 47-36 24V IP 67	1TRM 47-36/24V
Thermo-switch 60-49 12V IP 67	1TRM 60-49/12V
Thermo-switch 60-49 24V IP 67	1TRM 60-49/24V

PERFOMANCE DIAGRAM

kr [kcal/h°C]										kW [kW/°C]
180										
170										0,20
160										0,19
150										0,18
140										0,17
130										0,16
120										0,15
110/0	10	20	30	40	50	60	70	80	90	0,14 l/min

PRESSURE DROP DIAGRAM

Bar										
1,2										
1										
0,8										
0,6										
0,4										
0,2										
0	10	20	30	40	50	60	70	80	90	l/min

CORRECTION FACTOR

cSt	22	30	46	68	100	150	220
f	0,6	1	1,5	2,3	3,5	5	7

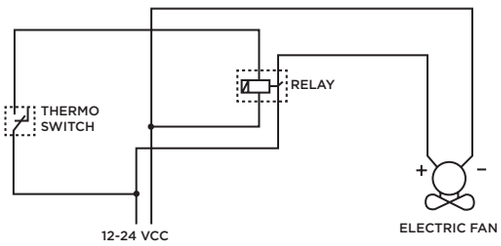

- Dimensions and technical characteristics are not binding

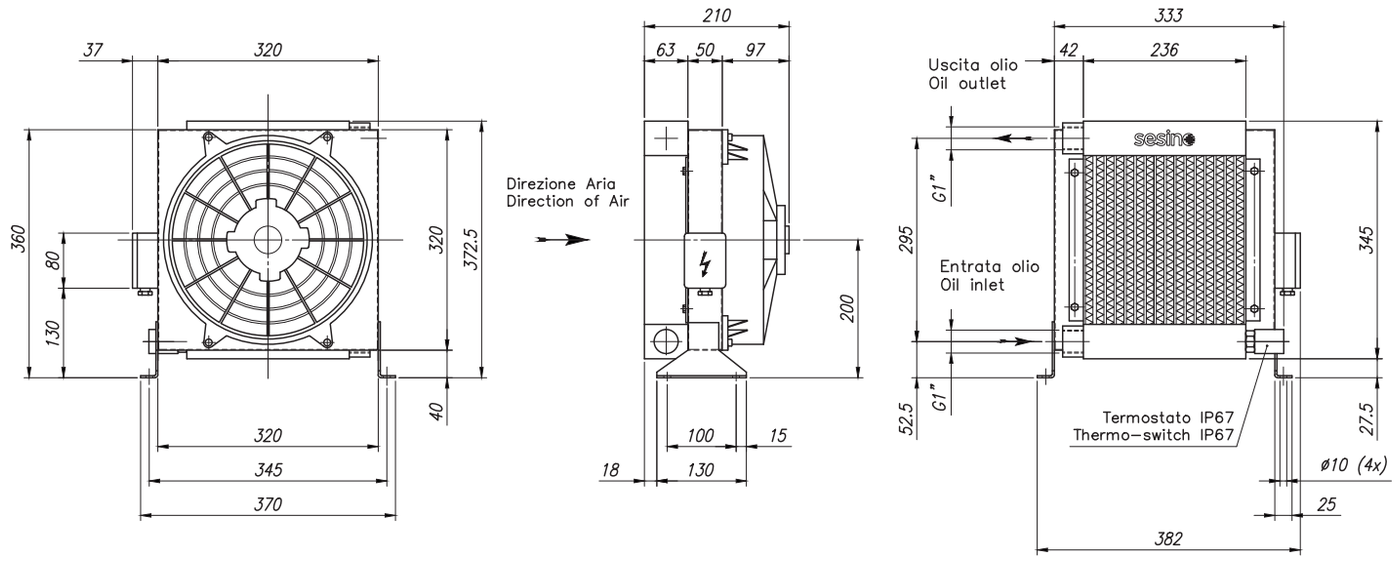

OIL FLOW	VOLTAGE	POWER	CURRENT	AIR FLOW	ELECTRIC PROTECTION	NOISE LEVEL	WEIGHT	ø FAN
l/min	V	W	A	m³/h	IP	dB(A)	kg	mm
20-150	12	190	14,8	1.700	68	79	10	280
20-150	24	190	7,4	1.700	68	79	10	280

BC 250 12/24 BY-PASS

PURCHASE CODES

BC 250 12/24V without thermo switch	3RBC25012BP 3RBC25024BP
BC 250 12/24V with thermo switch	3RBC25012T247BP 3RBC25024T247BP 3RBC25012T260BP 3RBC25024T260BP

SPARE PARTS

Cooling element	1RO03379BP
Frame	3CNL300.1
Electric fan 12V	1VNAPL30012C
Electric fan 24V	1VNAPL30024C
Thermo-switch 47-36 12V IP 67	1TRM 47-36/12V
Thermo-switch 47-36 24V IP 67	1TRM 47-36/24V
Thermo-switch 60-49 12V IP 67	1TRM 60-49/12V
Thermo-switch 60-49 24V IP 67	1TRM 60-49/24V
By-pass	9FTBC

kr [kcal/h°C]	PERFOMANCE DIAGRAM									kW [kW/°C]
180										
170										0,20
160										0,19
150										0,18
140										0,17
130										0,16
120										0,15
110/0	10	20	30	40	50	60	70	80	90	0,14 l/min

Bar	PRESSURE DROP DIAGRAM									
1,2										
1										
0,8										
0,6										
0,4										
0,2										
0	10	20	30	40	50	60	70	80	90	l/min

CORRECTION FACTOR							
cSt	22	30	46	68	100	150	220
f	0,6	1	1,5	2,3	3,5	5	7

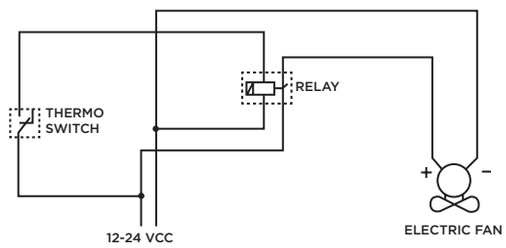

- Dimensions and technical characteristics are not binding

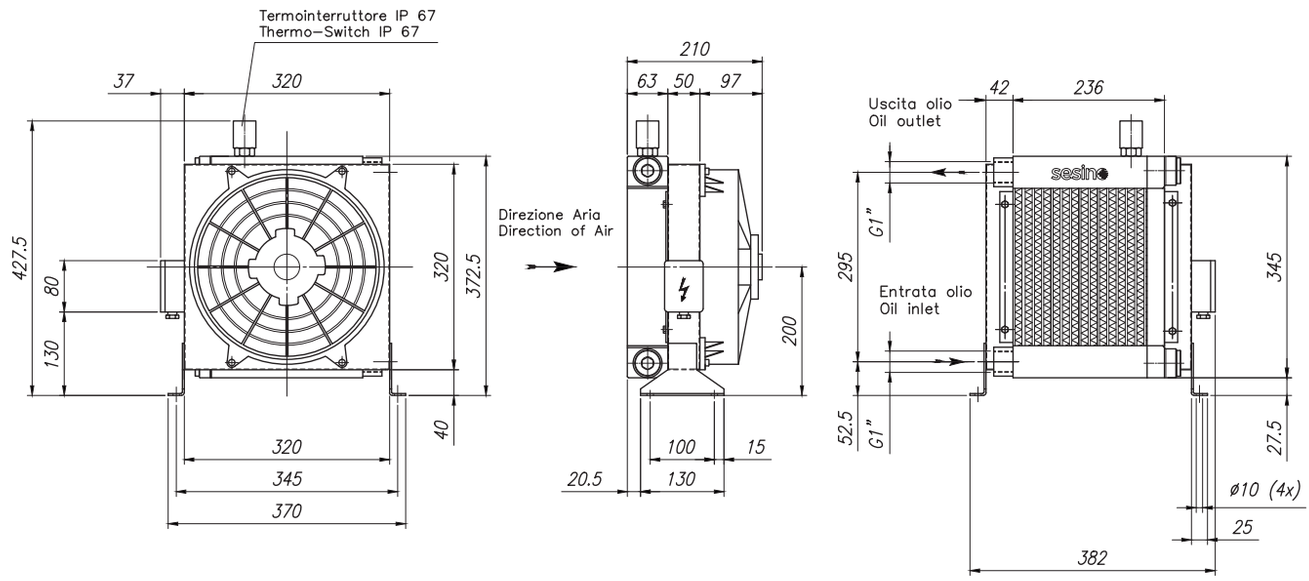

OIL FLOW	VOLTAGE	POWER	CURRENT	AIR FLOW	ELECTRIC PROTECTION	NOISE LEVEL	WEIGHT	ø FAN
l/min	V	W	A	m³/h	IP	dB(A)	kg	mm
20-150	12	190	14,8	1.700	68	79	10	280
20-150	24	190	7,4	1.700	68	79	10	280

BC 250/2 12/24V

PURCHASE CODES

BC 250/2 12/24V without thermo switch	3RBC250/212 3RBC250/224
BC 250/2 12/24V with thermo switch	3RBC250/212T247 3RBC250/224T247 3RBC250/212T260 3RBC250/224T260

SPARE PARTS

Cooling element	1RO03380
Frame	3CNL302.1
Electric fan 12V	1VNAPL30012C
Electric fan 24V	1VNAPL30024C
Thermo-switch 47-36 12V IP 67	1TRM 47-36/12V
Thermo-switch 47-36 24V IP 67	1TRM 47-36/24V
Thermo-switch 60-49 12V IP 67	1TRM 60-49/12V
Thermo-switch 60-49 24V IP 67	1TRM 60-49/24V

PERFOMANCE DIAGRAM

kr [kcal/h°C]										kW [kW/°C]
230										0,26
220										0,25
210										0,24
200										0,23
190										0,22
180										0,21
170										0,2
160/0	20	40	60	80	100	120	140	160	180	l/min

PRESSURE DROP DIAGRAM

Bar										
0,9										
0,75										
0,6										
0,45										
0,3										
0,15										
0	20	40	60	80	100	120	140	160	180	l/min

CORRECTION FACTOR

cSt	22	30	46	68	100	150	220
f	0,6	1	1,5	2,3	3,5	5	7

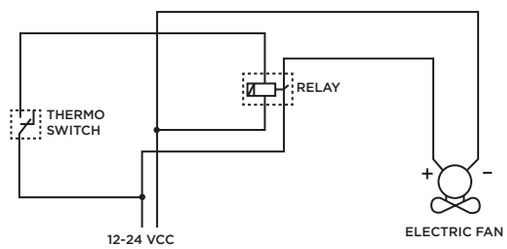

- Dimensions and technical characteristics are not binding

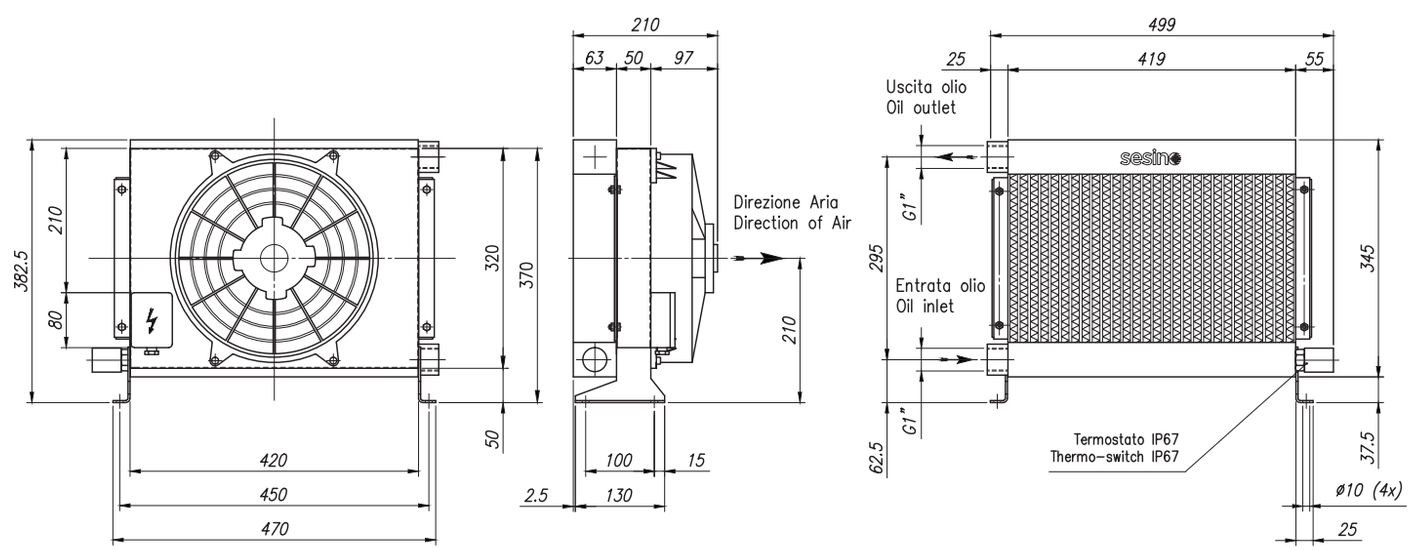

OIL FLOW	VOLTAGE	POWER	CURRENT	AIR FLOW	ELECTRIC PROTECTION	NOISE LEVEL	WEIGHT	ø FAN
l/min	V	W	A	m³/h	IP	dB(A)	kg	mm
30-180	12	180	15,0	2.200	68	83	14	280
30-180	24	180	7,5	2.200	68	83	14	280

BC 250/2 12/24 BY-PASS

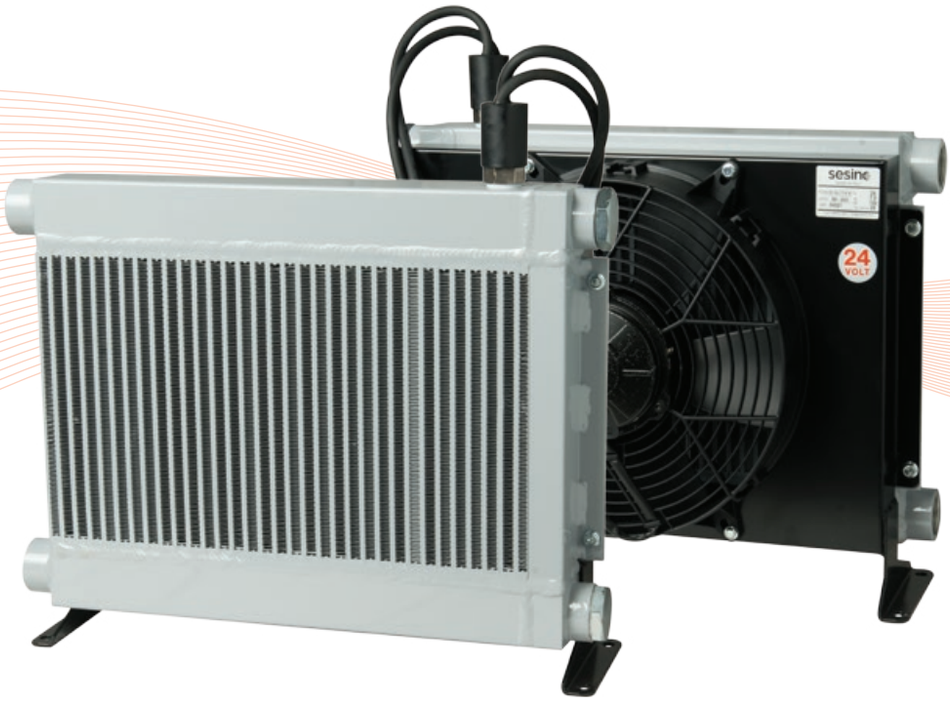

PURCHASE CODES

BC 250/2 12/24V without thermo switch	3RBC250/212BP 3RBC250/224BP
BC 250/2 12/24V with thermo switch	3RBC250/212T247BP 3RBC250/224T247BP 3RBC250/212T260BP 3RBC250/224T260BP

SPARE PARTS

Cooling element	1RO03380BP
Frame	3CNL302.1
Electric fan 12V	1VNAPL30012C
Electric fan 24V	1VNAPL30024C
Thermo-switch 47-36 12V IP 67	1TRM 47-36/12V
Thermo-switch 47-36 24V IP 67	1TRM 47-36/24V
Thermo-switch 60-49 12V IP 67	1TRM 60-49/12V
Thermo-switch 60-49 24V IP 67	1TRM 60-49/24V
By-pass	9FTBC

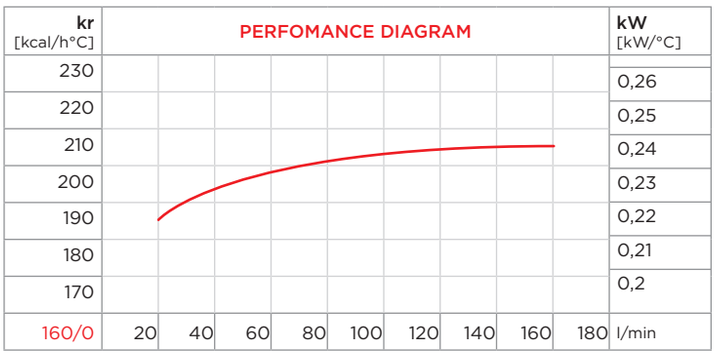

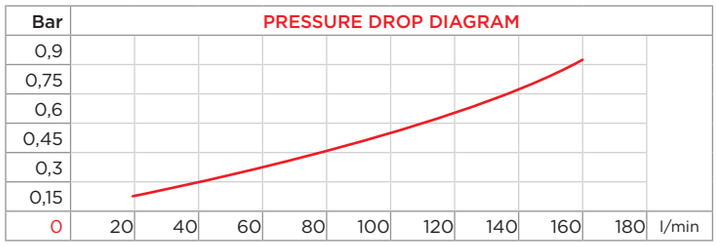

CORRECTION FACTOR							
cSt	22	30	46	68	100	150	220
f	0,6	1	1,5	2,3	3,5	5	7

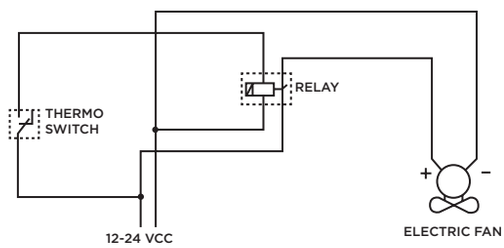

- Dimensions and technical characteristics are not binding

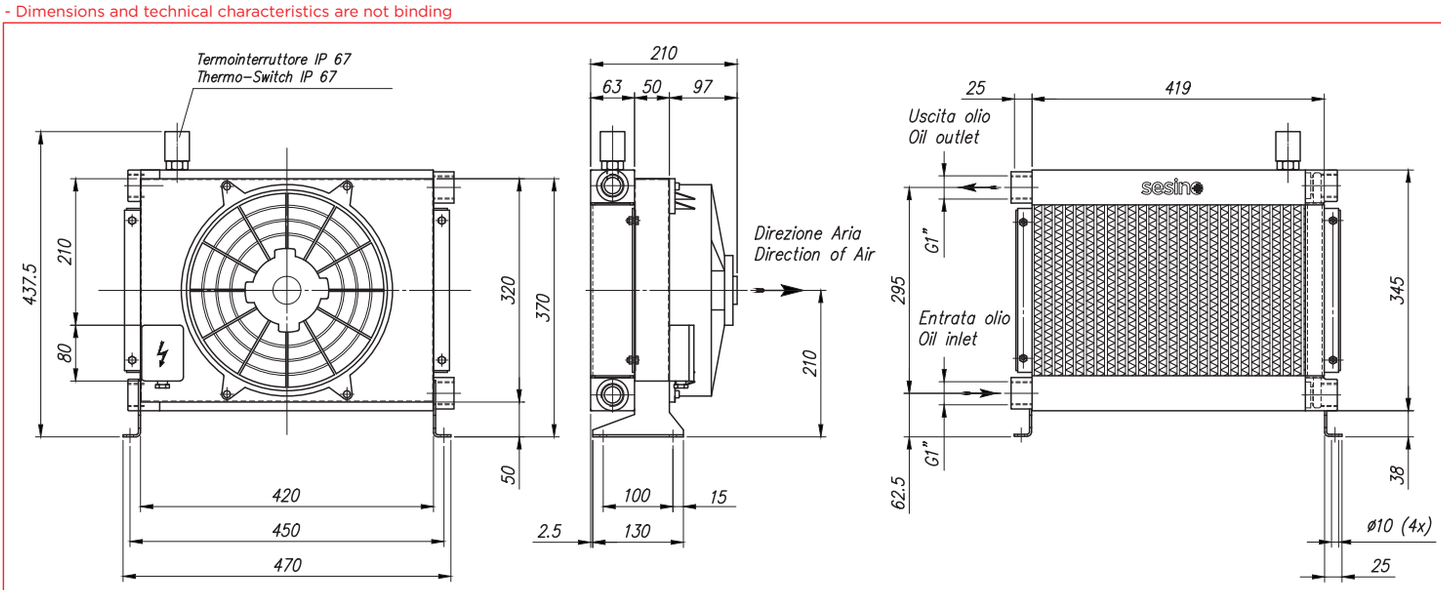

OIL FLOW	VOLTAGE	POWER	CURRENT	AIR FLOW	ELECTRIC PROTECTION	NOISE LEVEL	WEIGHT	ø FAN
l/min	V	W	A	m³/h	IP	dB(A)	kg	mm
30-180	12	180	15,0	2.200	68	83	14	280
30-180	24	180	7,5	2.200	68	83	14	280

BC 390 12/24V

PURCHASE CODES

BC 390 12/24V without thermo switch	3RBC39012 3RBC39024
BC 390 12/24V with thermo switch	3RBC39012T247 3RBC39024T247 3RBC39012T260 3RBC39024T260

SPARE PARTS

Cooling element	1RO03381
Frame	3CNBC390.1
Electric fan 12V	1MCVA18AP70AC
Electric fan 24V	1VNAPL58024C
Thermo-switch 47-36 12V IP 67	1TRM 47-36/12V
Thermo-switch 47-36 24V IP 67	1TRM 47-36/24V
Thermo-switch 60-49 12V IP 67	1TRM 60-49/12V
Thermo-switch 60-49 24V IP 67	1TRM 60-49/24V

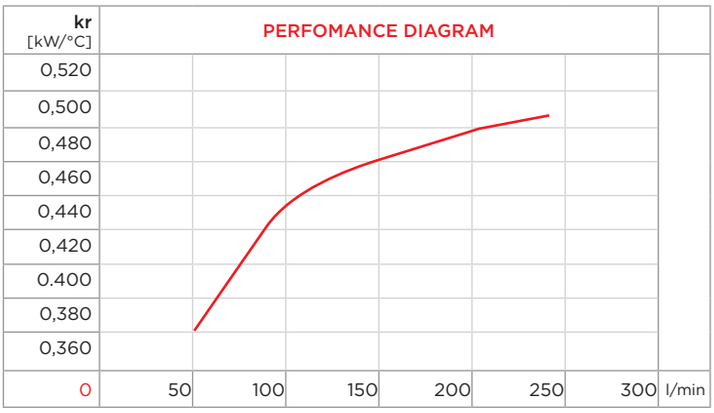

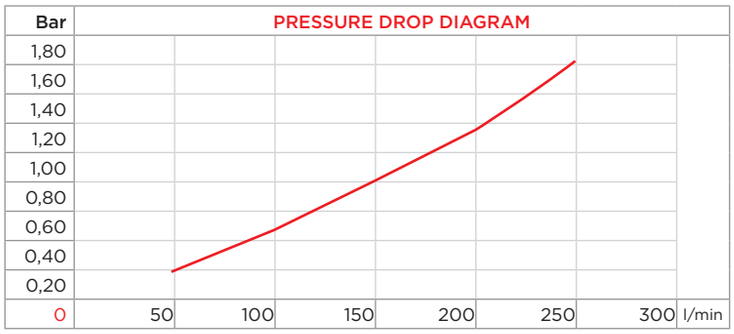

CORRECTION FACTOR							
cSt	22	30	46	68	100	150	220
f	0,6	1	1,5	2,3	3,5	5	7

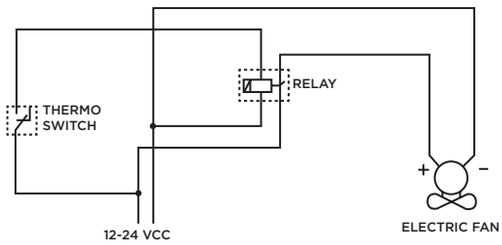

- Dimensions and technical characteristics are not binding

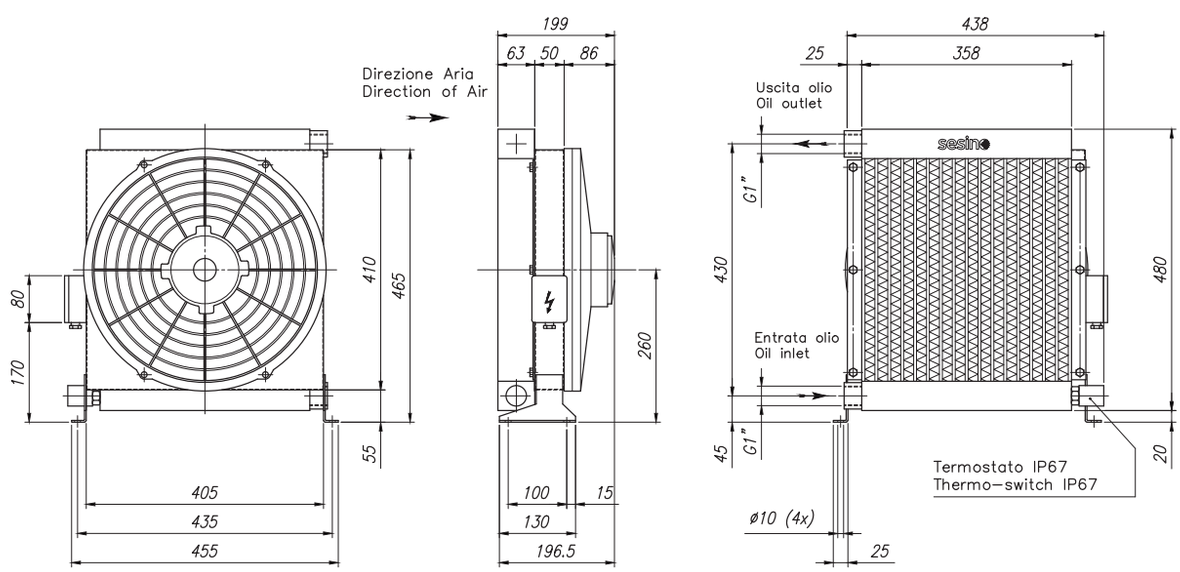

OIL FLOW	VOLTAGE	POWER	CURRENT	AIR FLOW	ELECTRIC PROTECTION	NOISE LEVEL	WEIGHT	ø FAN
l/min	V	W	A	m³/h	IP	dB(A)	kg	mm
50-250	12	210	17	2.500	68	82	16	310
50-250	24	210	8,5	2.500	68	82	16	310

BC 390 12/24 BY-PASS

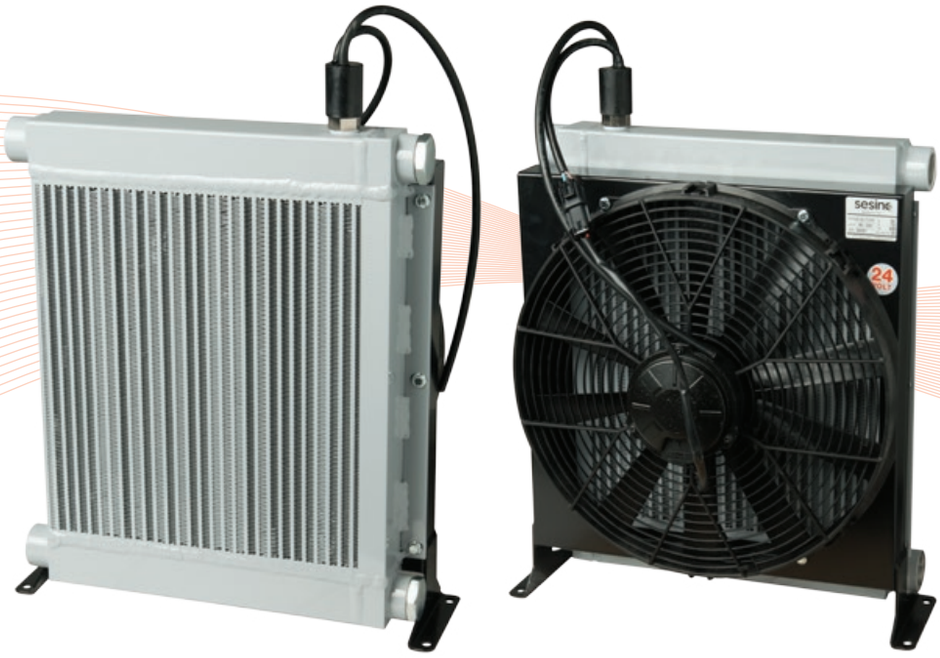

PURCHASE CODES

BC 390 12/24V without thermo switch	3RBC39012BP 3RBC39024BP
BC 390 12/24V with thermo switch	3RBC39012T247BP 3RBC39024T247BP 3RBC39012T260BP 3RBC39024T260BP

SPARE PARTS

Cooling element	1RO03381BP
Frame	3CNBC390.1
Electric fan 12V	1MCVA18AP70AC
Electric fan 24V	1VNAPL58024C
Thermo-switch 47-36 12V IP 67	1TRM 47-36/12V
Thermo-switch 47-36 24V IP 67	1TRM 47-36/24V
Thermo-switch 60-49 12V IP 67	1TRM 60-49/12V
Thermo-switch 60-49 24V IP 67	1TRM 60-49/24V
By-pass	9FTBC

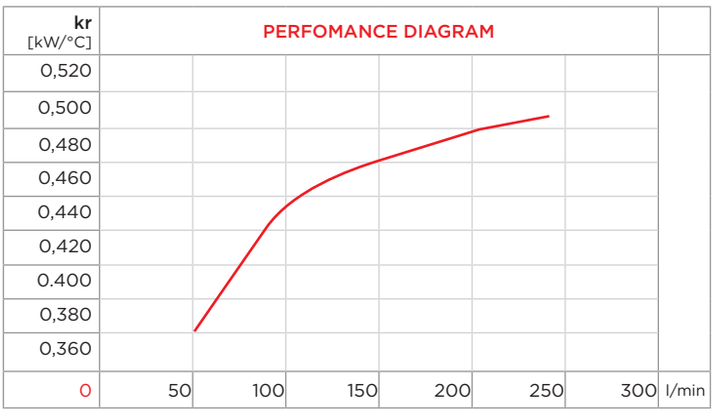

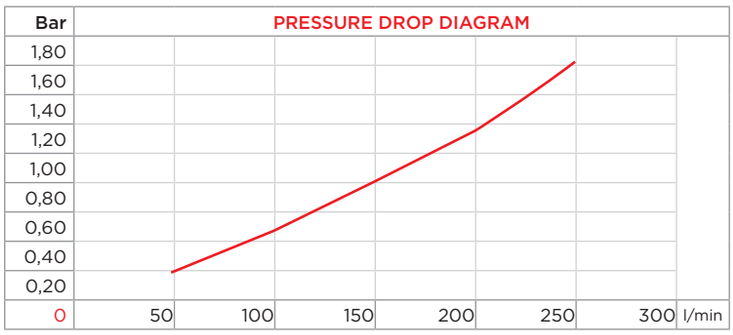

CORRECTION FACTOR							
cSt	22	30	46	68	100	150	220
f	0,6	1	1,5	2,3	3,5	5	7

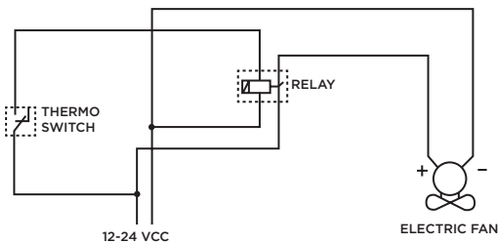

- Dimensions and technical characteristics are not binding

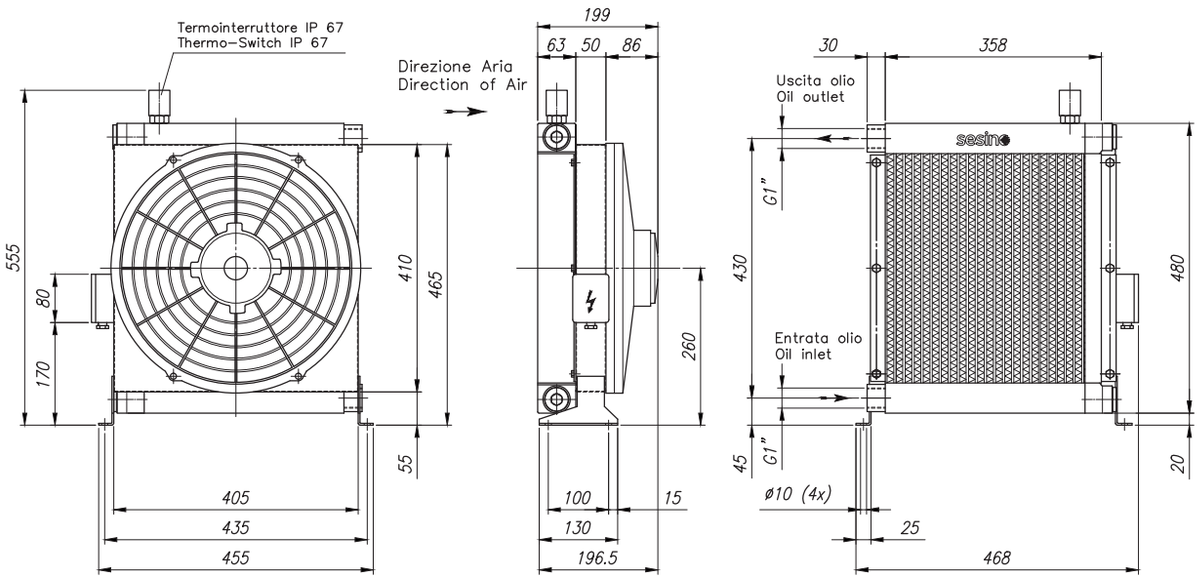

OIL FLOW	VOLTAGE	POWER	CURRENT	AIR FLOW	ELECTRIC PROTECTION	NOISE LEVEL	WEIGHT	ø FAN
l/min	V	W	A	m³/h	IP	dB(A)	kg	mm
50-250	12	210	17	2.500	68	82	16	310
50-250	24	210	8,5	2.500	68	82	16	310

BC 390/2 12/24V

PURCHASE CODES

BC 390/2 12/24V without thermo switch	3RBC390/212 3RBC390/224
BC 390/2 12/24V with thermo switch	3RBC390/212T247 3RBC390/224T247 3RBC390/212T260 3RBC390/224T260

SPARE PARTS

Cooling element	1RO03383
Frame	3CNBC390/2.1
Electric fan 12V	1MCVA18AP70AC
Electric fan 24V	1VNAPL58024C
Thermo-switch 47-36 12V IP 67	1TRM 47-36/12V
Thermo-switch 47-36 24V IP 67	1TRM 47-36/24V
Thermo-switch 60-49 12V IP 67	1TRM 60-49/12V
Thermo-switch 60-49 24V IP 67	1TRM 60-49/24V

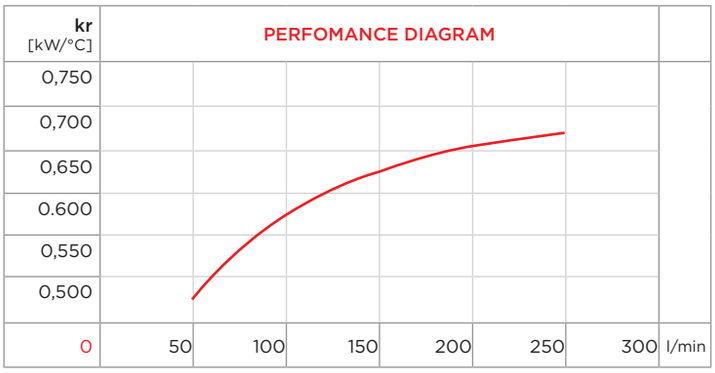

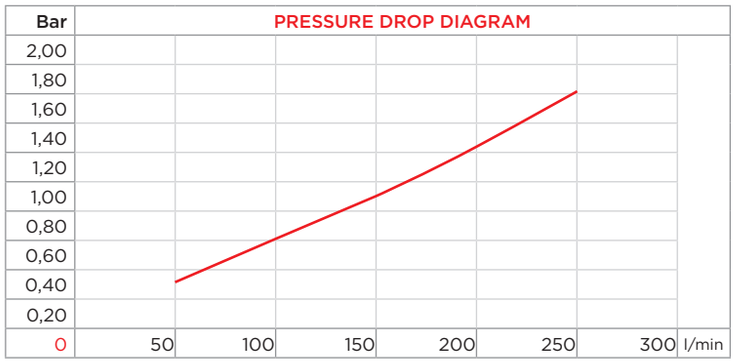

CORRECTION FACTOR							
cSt	22	30	46	68	100	150	220
f	0,6	1	1,5	2,3	3,5	5	7

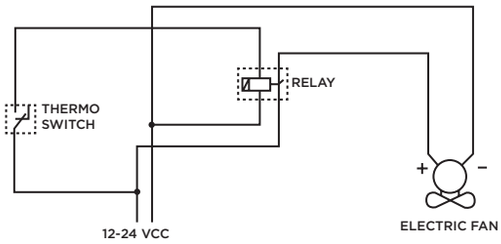

- Dimensions and technical characteristics are not binding

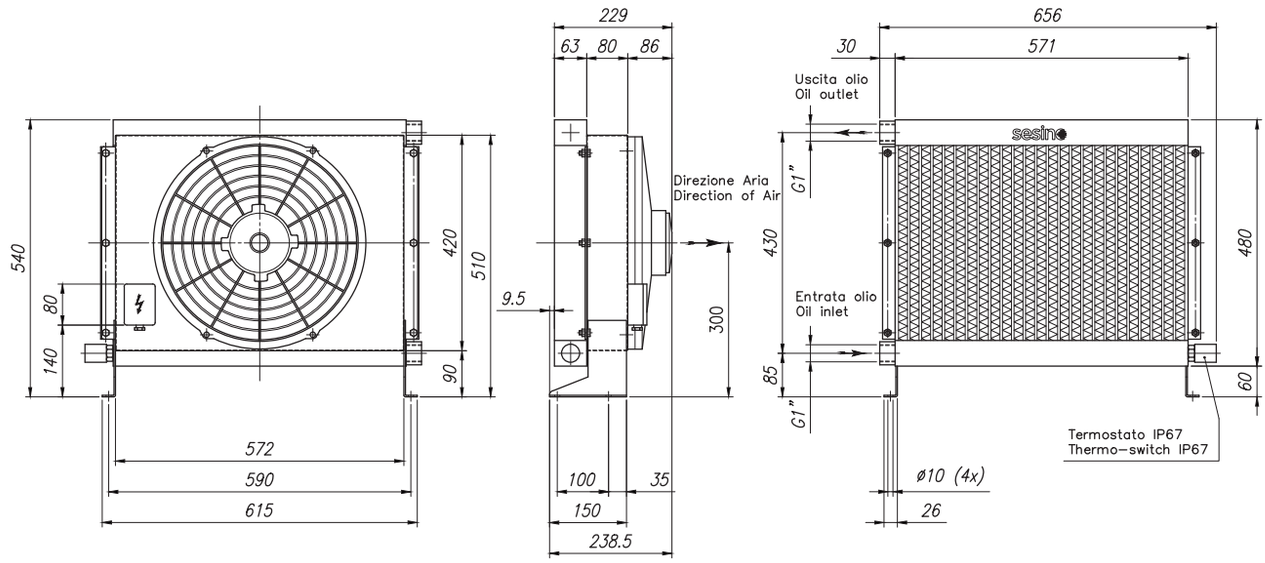

OIL FLOW	VOLTAGE	POWER	CURRENT	AIR FLOW	ELECTRIC PROTECTION	NOISE LEVEL	WEIGHT	ø FAN
l/min	V	W	A	m³/h	IP	dB(A)	kg	mm
50-250	12	240	20	2.800	68	85	25	380
50-250	24	240	10	2.800	68	85	25	380

BC 390/2 12/24 BY-PASS

PURCHASE CODES

BC 390/2 12/24V without thermo switch	3RBC390/212BP 3RBC390/224BP
BC 390/2 12/24V with thermo switch	3RBC390/212T247BP 3RBC390/224T247BP 3RBC390/212T260BP 3RBC390/224T260BP

SPARE PARTS

Cooling element	1RO03383BP
Frame	3CNBC390/2.1
Electric fan 12V	1MCVA18AP70AC
Electric fan 24V	1VNAPL58024C
Thermo-switch 47-36 12V IP 67	1TRM 47-36/12V
Thermo-switch 47-36 24V IP 67	1TRM 47-36/24V
Thermo-switch 60-49 12V IP 67	1TRM 60-49/12V
Thermo-switch 60-49 24V IP 67	1TRM 60-49/24V
By-pass	9FTBC

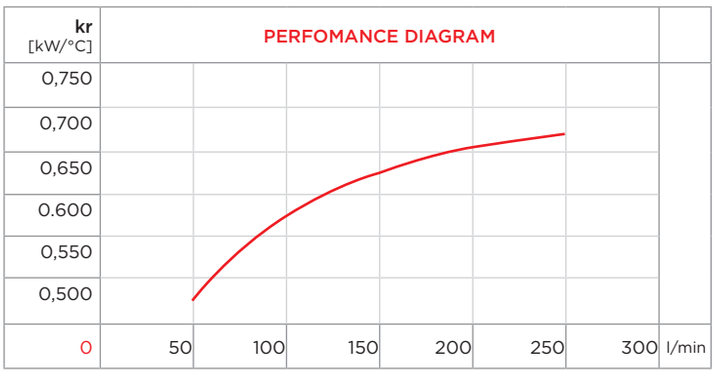

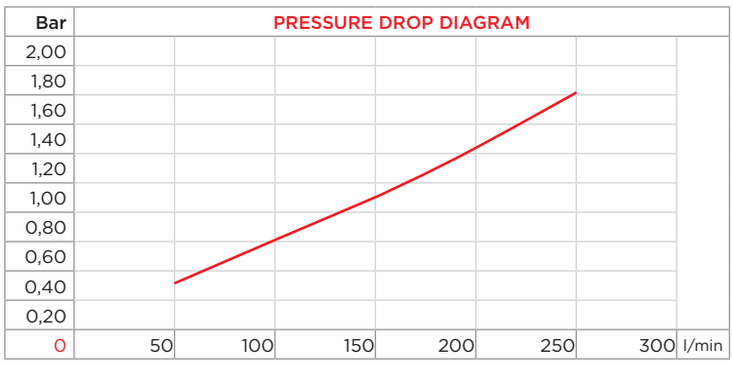

CORRECTION FACTOR							
cSt	22	30	46	68	100	150	220
f	0,6	1	1,5	2,3	3,5	5	7

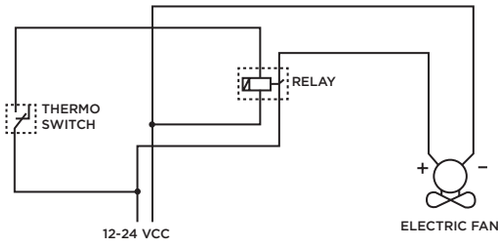

- Dimensions and technical characteristics are not binding

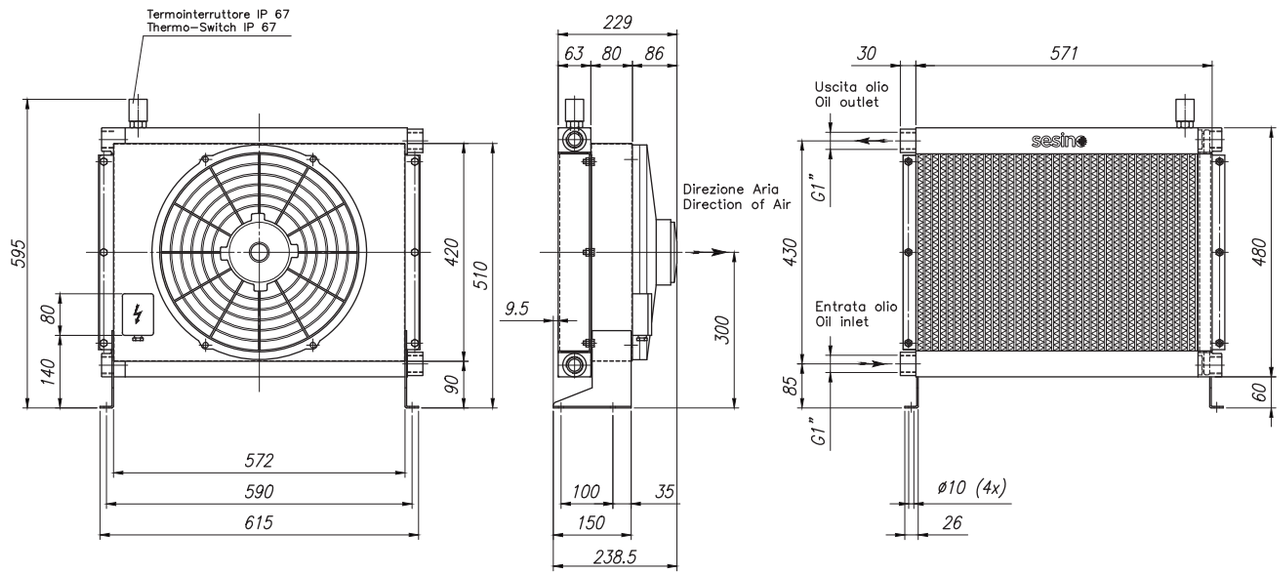

OIL FLOW	VOLTAGE	POWER	CURRENT	AIR FLOW	ELECTRIC PROTECTION	NOISE LEVEL	WEIGHT	ø FAN
l/min	V	W	A	m³/h	IP	dB(A)	kg	mm
50-250	12	240	20	2.800	68	85	25	380
50-250	24	240	10	2.800	68	85	25	380

BC 390/3 12/24 BY-PASS

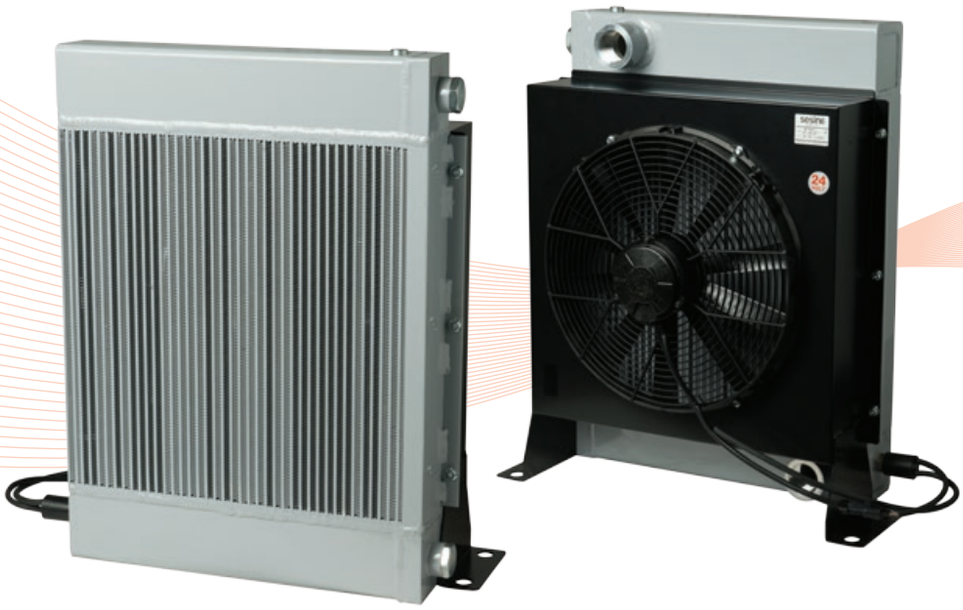

PURCHASE CODES

BC 390/3 12/24V without thermo switch	3RBC390/312BP 3RBC390/324BP
BC 390/3 12/24V with thermo switch	3RBC390/312T247BP 3RBC390/324T247BP 3RBC390/312T260BP 3RBC390/324T260BP

SPARE PARTS

Cooling element	1RO14494BP
Frame	3CNBC390/3.1
Electric fan 12V	1MCVA18AP70AC
Electric fan 24V	1VNAPL58024C
Thermo-switch 47-36 12V IP 67	1TRM 47-36/12V
Thermo-switch 47-36 24V IP 67	1TRM 47-36/24V
Thermo-switch 60-49 12V IP 67	1TRM 60-49/12V
Thermo-switch 60-49 24V IP 67	1TRM 60-49/24V
By-pass	9FTBC

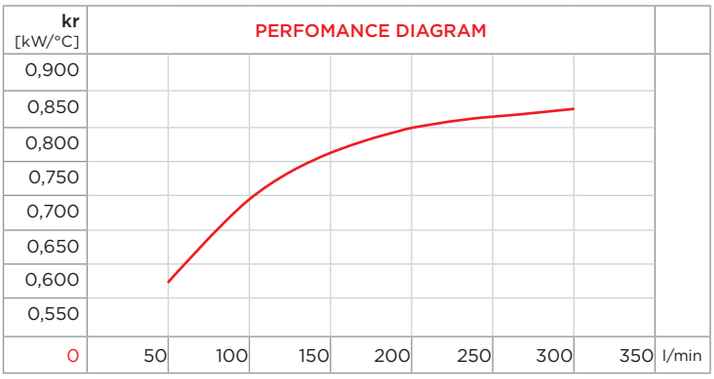

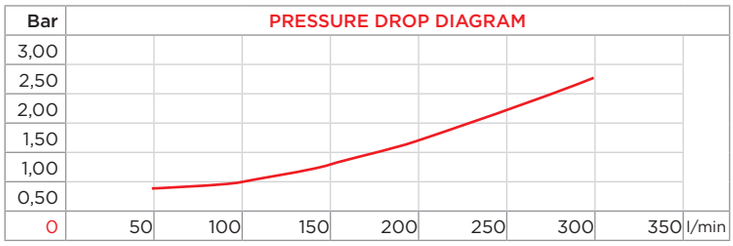

CORRECTION FACTOR							
cSt	22	30	46	68	100	150	220
f	0,6	1	1,5	2,3	3,5	5	7

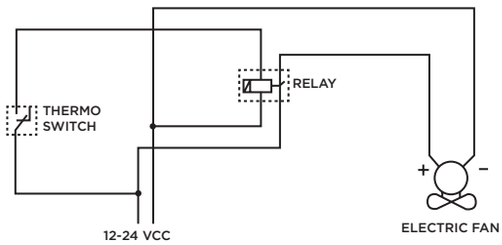

- Dimensions and technical characteristics are not binding

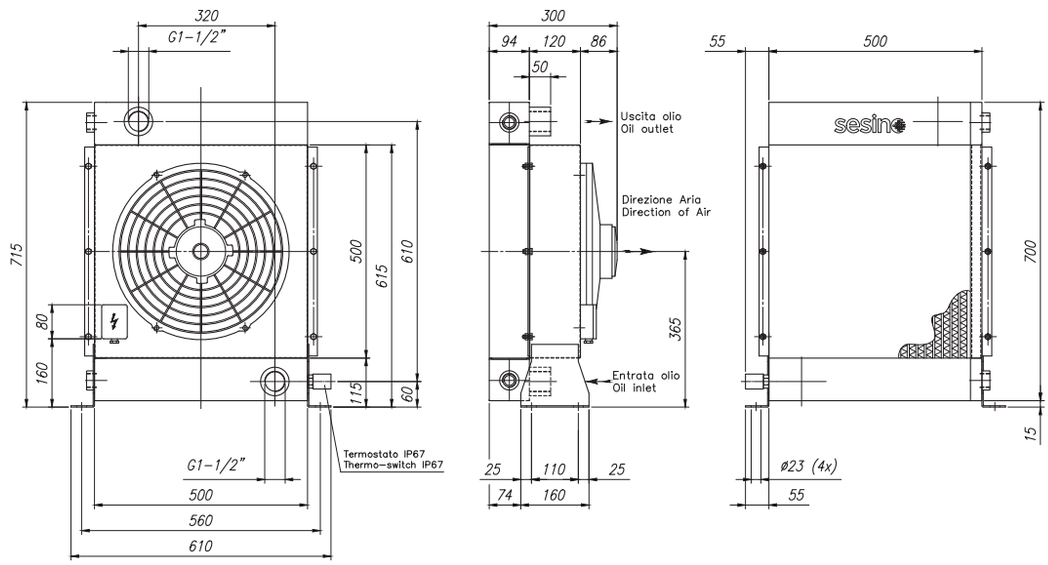

OIL FLOW	VOLTAGE	POWER	CURRENT	AIR FLOW	ELECTRIC PROTECTION	NOISE LEVEL	WEIGHT	ø FAN
l/min	V	W	A	m³/h	IP	dB(A)	kg	mm
50-300	12	240	20	2.900	68	85	33	380
50-300	24	240	10	2.900	68	85	33	380

BC 210 AC

PURCHASE CODES

BC 210 single phase without thermo switch	3RBC210
BC 210 single phase with thermo switch	3RBC210T247 3RBC210T260
BC 210 three phase without thermo switch	3RBC21038
BC 210 three phase with thermo switch	3RBC21038T247 3RBC21038T260

SPARE PARTS

Cooling element	1RO03378
Frame	3CNBC210M/T.1
Electric fan for BC 210 single phase	1VNA2E200.1
Electric fan for BC 210 three phase	1VNA2D200
Thermo-switch 47-36 IP 65	1TRM 47-36
Thermo-switch 60-49 IP 65	1TRM 60-49

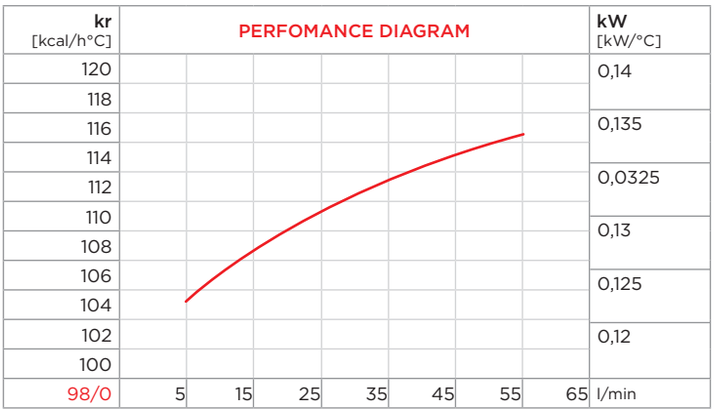

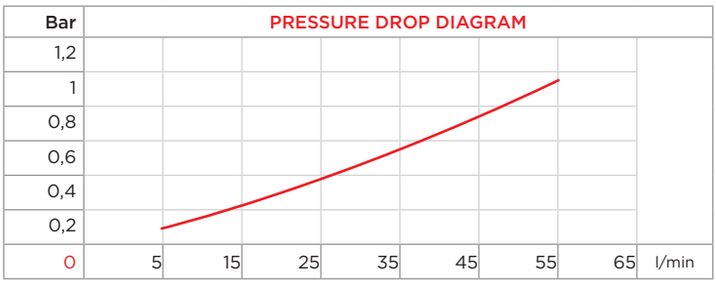

CORRECTION FACTOR							
cSt	22	30	46	68	100	150	220
f	0,6	1	1,5	2,3	3,5	5	7

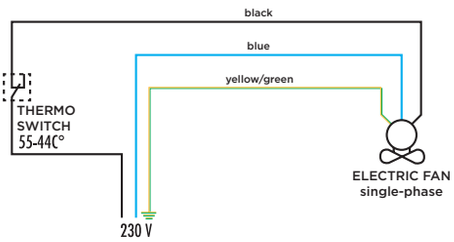

- Dimensions and technical characteristics are not binding

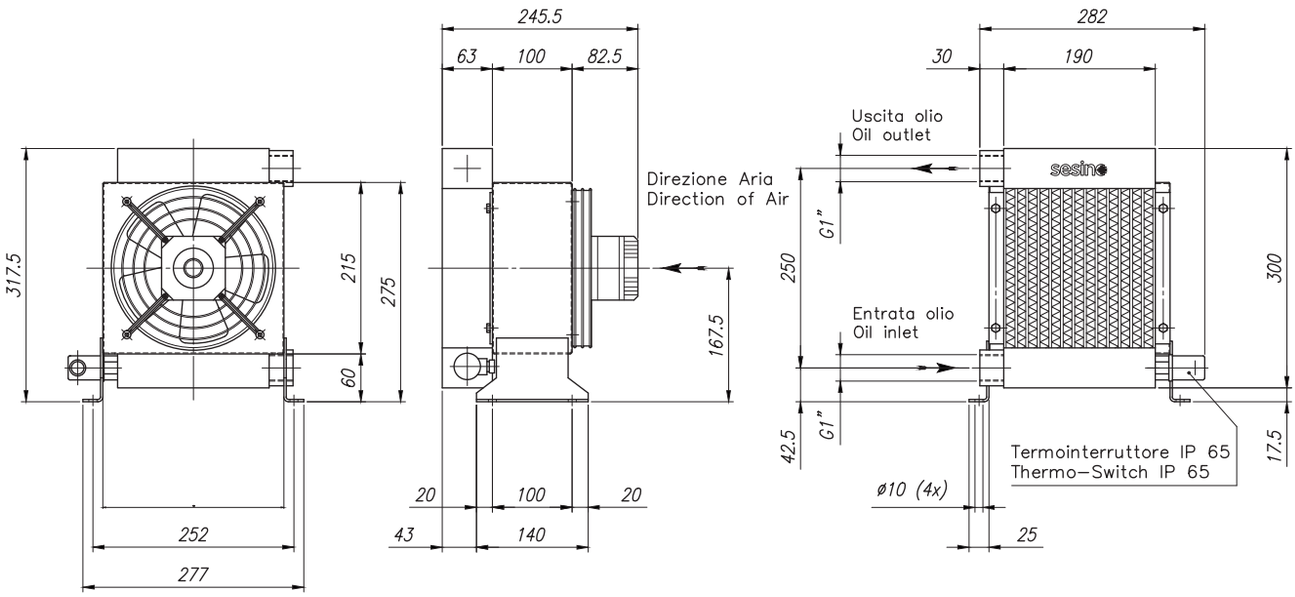

OIL FLOW	VOLTAGE	FREQUENCY	POWER	CURRENT	AIR FLOW	PROTECTION	NOISE LEVEL	WEIGHT	ø FAN
l/min	V	hz	W	A	m³/h	IP	dB(A)	kg	mm
10-80	230/240	50/60	18/62	0,27	630	54	55	6	200
10-80	400	50/60	68/70	0,17/0,13	630	54	55	6	200

BC 250 AC

PURCHASE CODES

BC 250 single phase without thermo switch	3RBC250
BC 250 single phase with thermo switch	3RBC250T247 3RBC250T260
BC 250 three phase without thermo switch	3RBC25038
BC 250 three phase with thermo switch	3RBC25038T247 3RBC25038T260

SPARE PARTS

Cooling element	1RO03379
Frame	3CNBC250M/T.1
Electric fan for BC 250 single phase	1VNA2E250G
Electric fan for BC 250 three phase	1VNA2D250.2
Thermo-switch 47-36 IP 65	1TRM 47-36
Thermo-switch 60-49 IP 65	1TRM 60-49

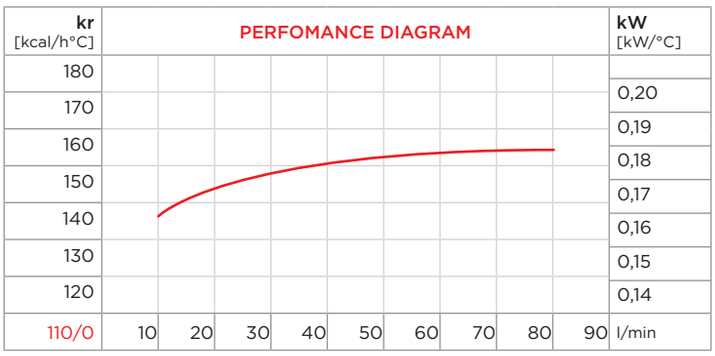

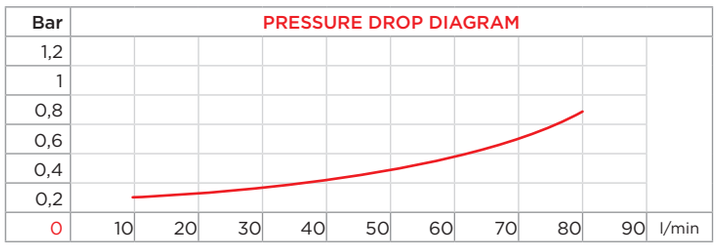

CORRECTION FACTOR							
cSt	22	30	46	68	100	150	220
f	0,6	1	1,5	2,3	3,5	5	7

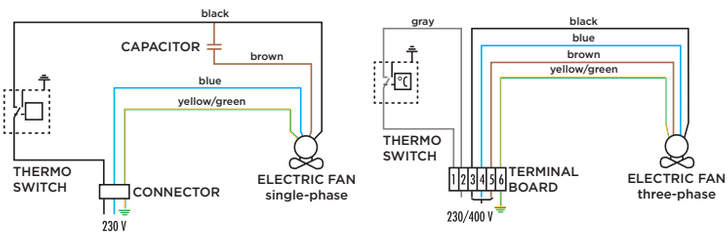

- Dimensions and technical characteristics are not binding

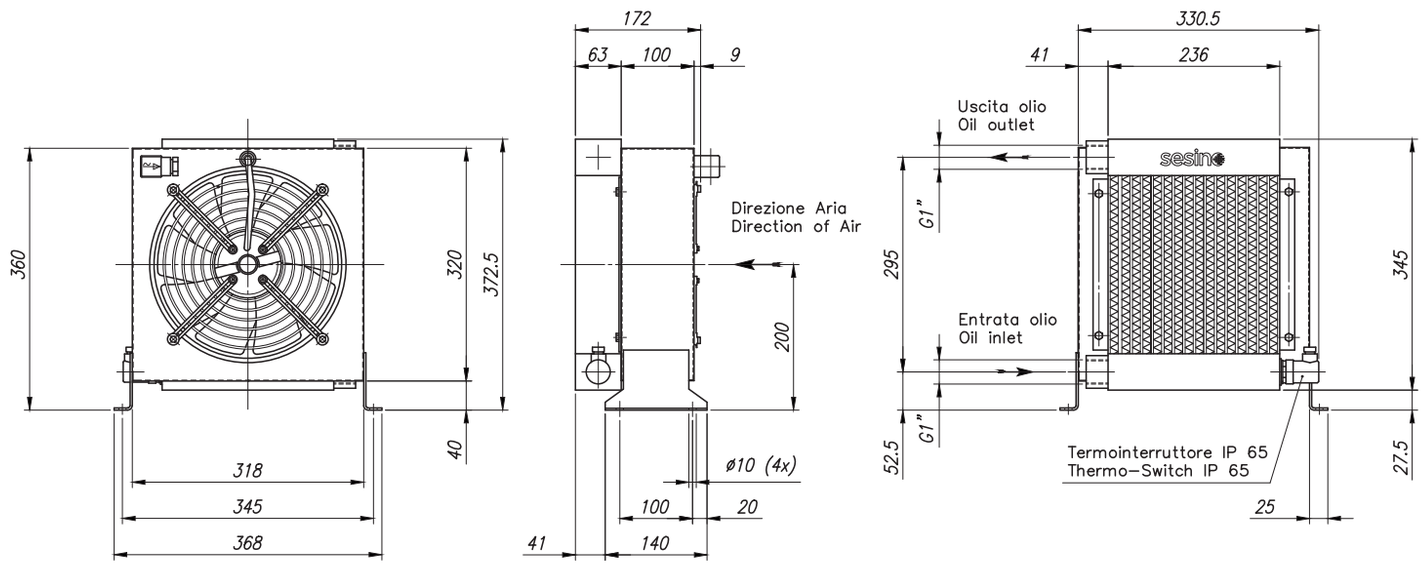

OIL FLOW	VOLTAGE	FREQUENCY	POWER	CURRENT	AIR FLOW	PROTECTION	NOISE LEVEL	WEIGHT	ø FAN
l/min	V	hz	W	A	m³/h	IP	dB(A)	kg	mm
20-150	230	50/60	115/150	0,51/0,66	910	54	74	13	250
20-150	400	50/60	100/140	0,20/0,23	950	54	73	13	250

BC 250 AC BY-PASS

PURCHASE CODES

BC 250 single phase without thermo switch	3RBC250BP
BC 250 single phase with thermo switch	3RBC250T247BP 3RBC250T260BP
BC 250 three phase without thermo switch	3RBC25038BP
BC 250 three phase with thermo switch	3RBC25038T247BP 3RBC25038T260BP

SPARE PARTS

Cooling element	1RO03379BP
Frame	3CNBC250M/T.1
Electric fan for BC 250 single phase	1VNA2E250G
Electric fan for BC 250 three phase	1VNA2D250.2
Thermo-switch 47-36 IP 65	1TRM 47-36
Thermo-switch 60-49 IP 65	1TRM 60-49
By-pass	9FTBC

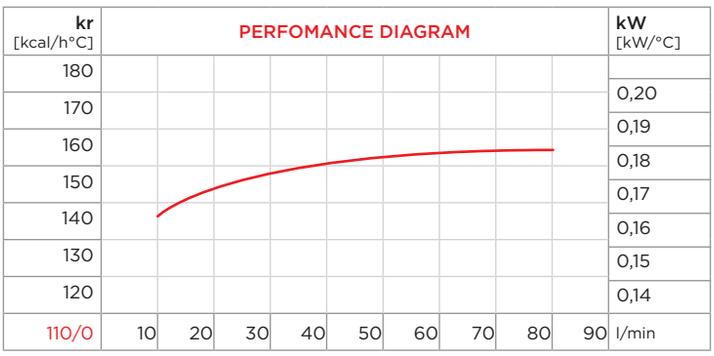

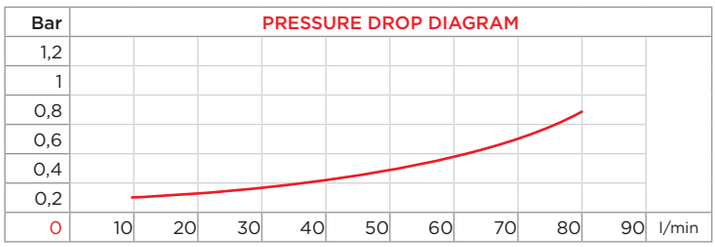

CORRECTION FACTOR							
cSt	22	30	46	68	100	150	220
f	0,6	1	1,5	2,3	3,5	5	7

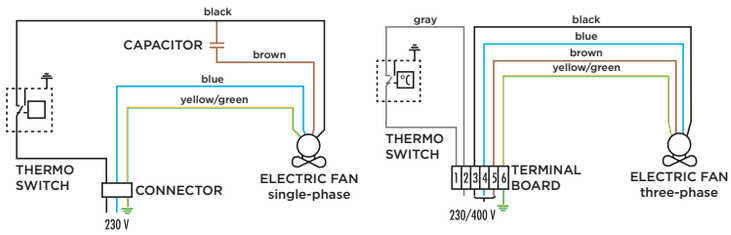

- Dimensions and technical characteristics are not binding

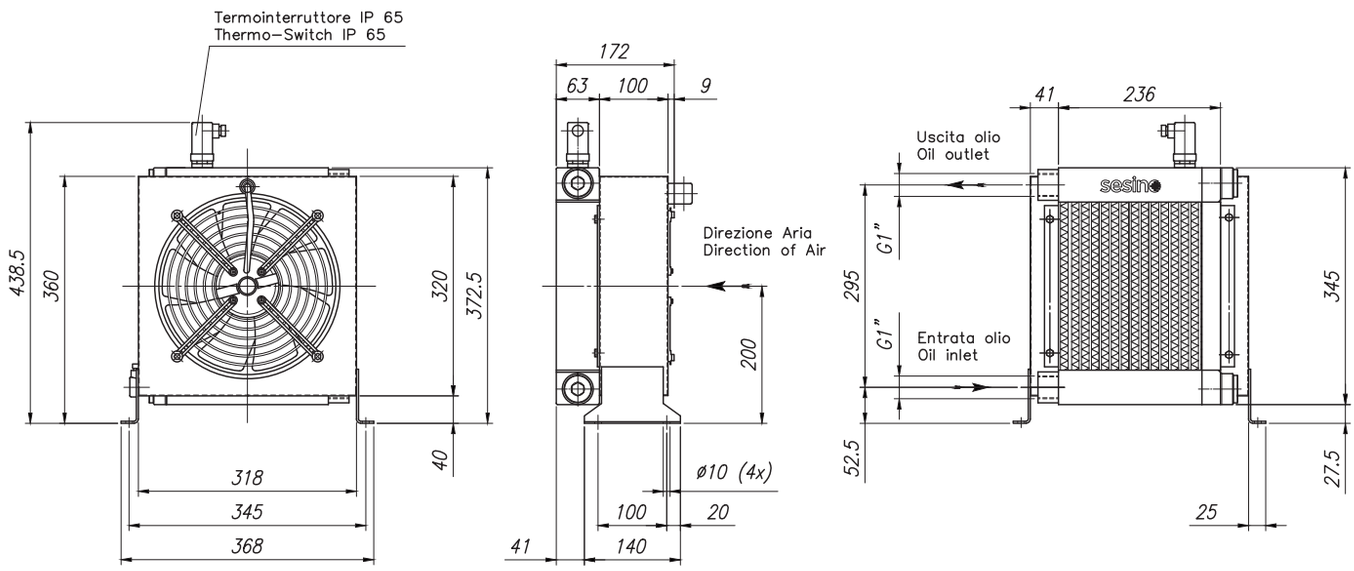

OIL FLOW	VOLTAGE	FREQUENCY	POWER	CURRENT	AIR FLOW	PROTECTION	NOISE LEVEL	WEIGHT	ø FAN
l/min	V	hz	W	A	m³/h	IP	dB(A)	kg	mm
20-150	230	50/60	115/150	0,51/0,66	910	54	74	13	250
20-150	400	50/60	100/140	0,20/0,23	950	54	73	13	250

BC 250/2 AC

PURCHASE CODES

BC 250/2 single phase without thermo switch	3RBC250/2
BC 250/2 single phase with thermo switch	3RBC250/2T247 3RBC250/2T260
BC 250/2 three phase without thermo switch	3RBC250/238
BC 250/2 three phase with thermo switch	3RBC250/238T247 3RBC250/238T260

SPARE PARTS

Cooling element	1RO03380
Frame	3CNBC250/2M/T.1
Electric fan for BC 250/2 single phase	1VNA2E250G
Electric fan for BC 250/2 three phase	1VNA2D250.2
Thermo-switch 47-36 IP 65	1TRM 47-36
Thermo-switch 60-49 IP 65	1TRM 60-49

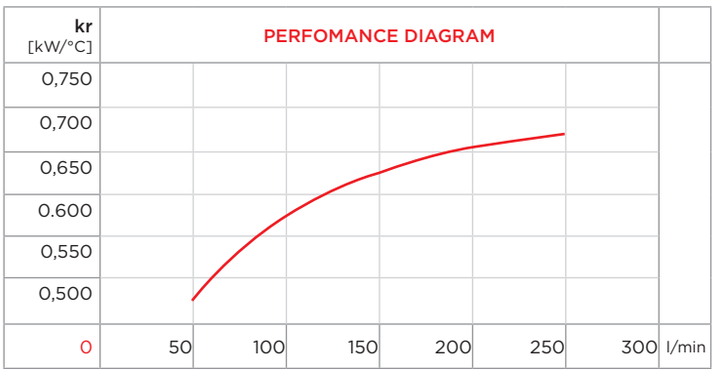

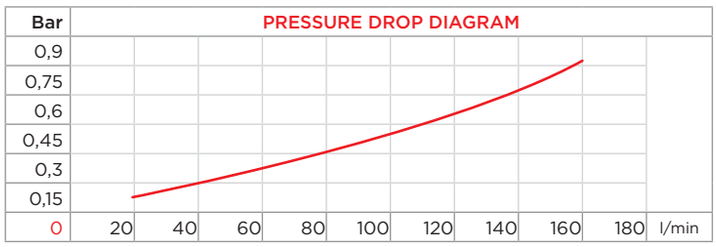

CORRECTION FACTOR							
cSt	22	30	46	68	100	150	220
f	0,6	1	1,5	2,3	3,5	5	7

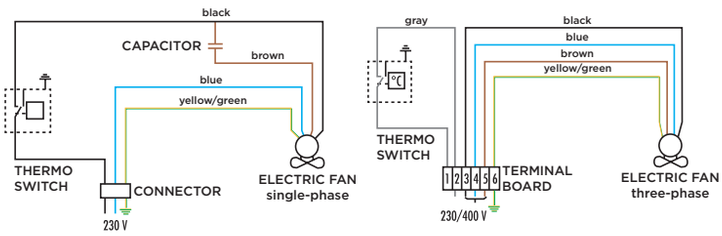

- Dimensions and technical characteristics are not binding

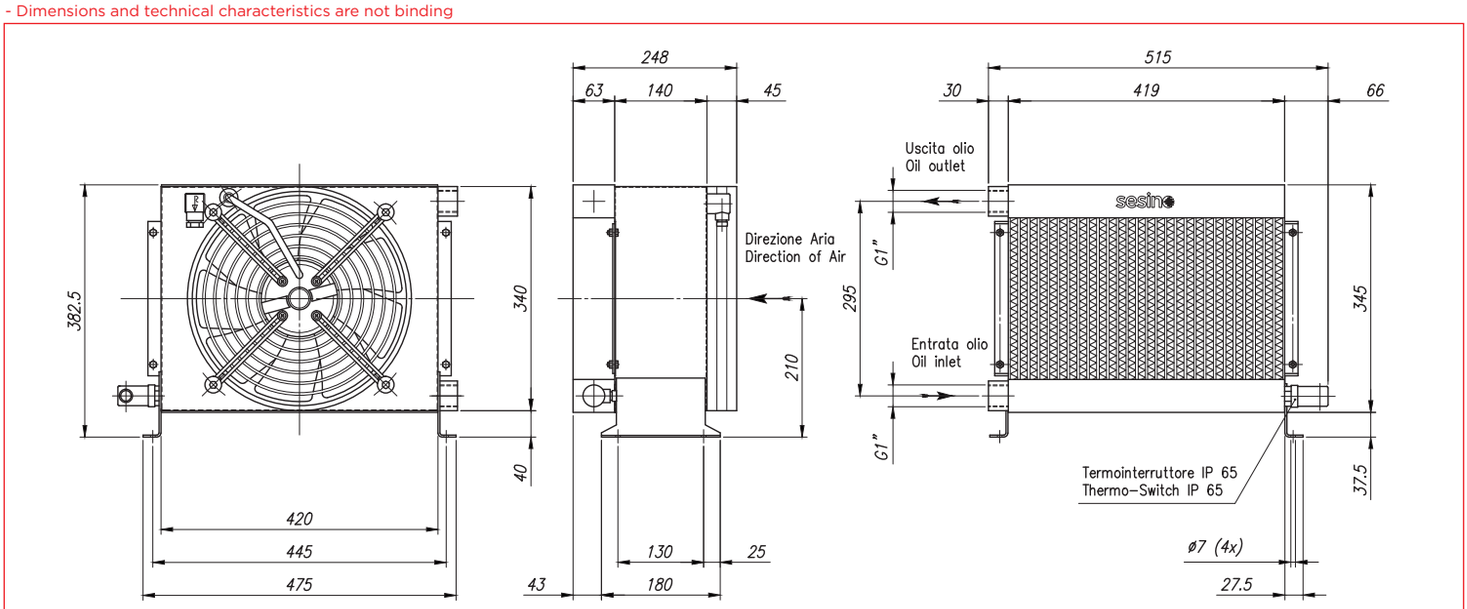

OIL FLOW	VOLTAGE	FREQUENCY	POWER	CURRENT	AIR FLOW	PROTECTION	NOISE LEVEL	WEIGHT	ø FAN
l/min	V	hz	W	A	m³/h	IP	dB(A)	kg	mm
30-180	230	50/60	115/150	0,51/0,66	1.300	54	75	17	250
30-180	400	50/60	100/140	0,20/0,23	1.300	54	73	12	250

BC 250/2 AC BY-PASS

PURCHASE CODES

BC 250/2 single phase without thermo switch	3RBC250/2BP
BC 250/2 single phase with thermo switch	3RBC250/2T247BP 3RBC250/2T260BP
BC 250/2 three phase without thermo switch	3RBC250/238BP
BC 250/2 three phase with thermo switch	3RBC250/238T247BP 3RBC250/238T260BP

SPARE PARTS

Cooling element	1RO03380BP
Frame	3CNBC250/2M/T.1
Electric fan for BC 250/2 single phase	1VNA2E250G
Electric fan for BC 250/2 three phase	1VNA2D250.2
Thermo-switch 47-36 IP 65	1TRM 47-36
Thermo-switch 60-49 IP 65	1TRM 60-49
By-pass	9FTBC

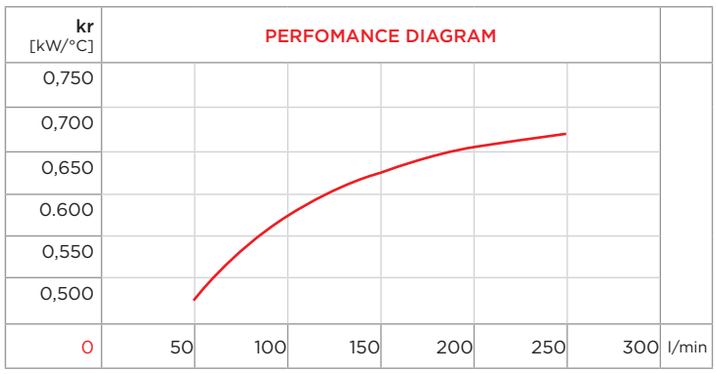

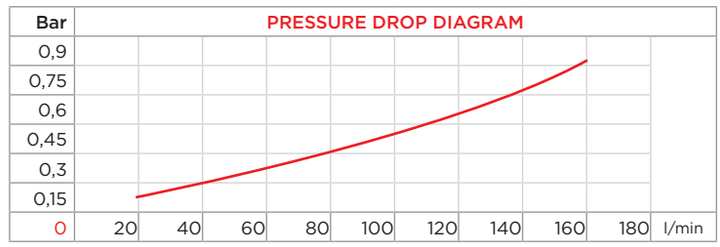

CORRECTION FACTOR							
cSt	22	30	46	68	100	150	220
f	0,6	1	1,5	2,3	3,5	5	7

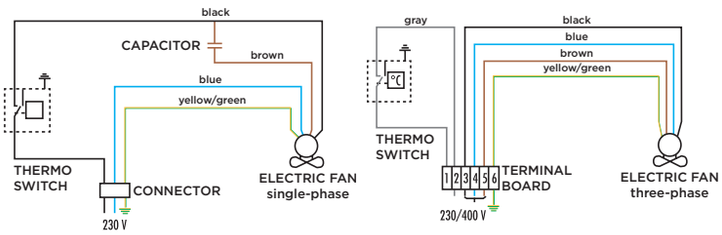

- Dimensions and technical characteristics are not binding

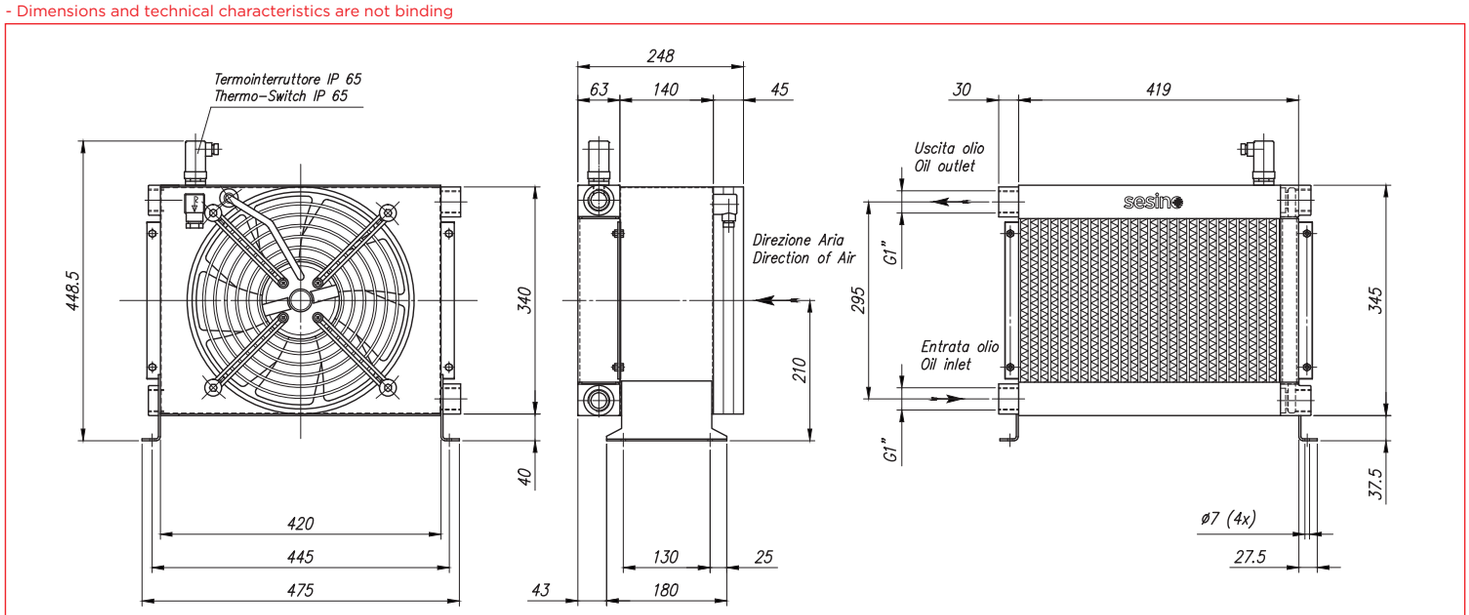

OIL FLOW	VOLTAGE	FREQUENCY	POWER	CURRENT	AIR FLOW	PROTECTION	NOISE LEVEL	WEIGHT	ø FAN
l/min	V	hz	W	A	m³/h	IP	dB(A)	kg	mm
30-180	230	50/60	115/150	0,51/0,66	1.300	54	75	17	250
30-180	400	50/60	100/140	0,20/0,23	1.300	54	73	17	250

BC 390 AC

PURCHASE CODES

BC 390 single phase without thermo switch	3RBC390
BC 390 single phase with thermo switch	3RBC390T247 3RBC390T260
BC 390 three phase without thermo switch	3RBC39038
BC 390 three phase with thermo switch	3RBC39038T247 3RBC39038T260

SPARE PARTS

Cooling element	1RO03381
Frame	3CNBC390M/T.1
Electric fan for BC 250 single phase	1VNA4E350
Electric fan for BC 250 three phase	1VNELCO43038DV1
Thermo-switch 47-36 IP 65	1TRM 47-36
Thermo-switch 60-49 IP 65	1TRM 60-49

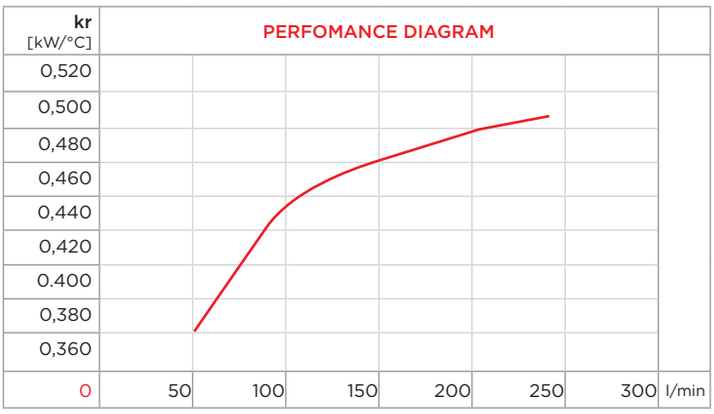

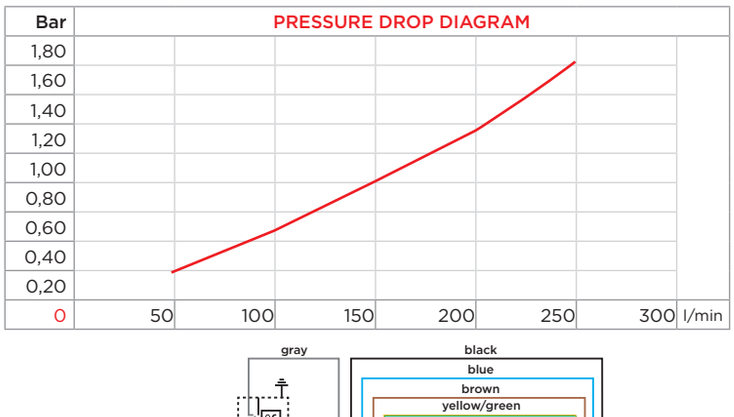

CORRECTION FACTOR							
cSt	22	30	46	68	100	150	220
f	0,6	1	1,5	2,3	3,5	5	7

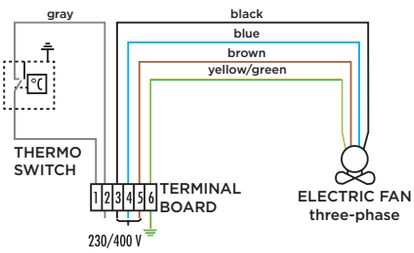

- Dimensions and technical characteristics are not binding

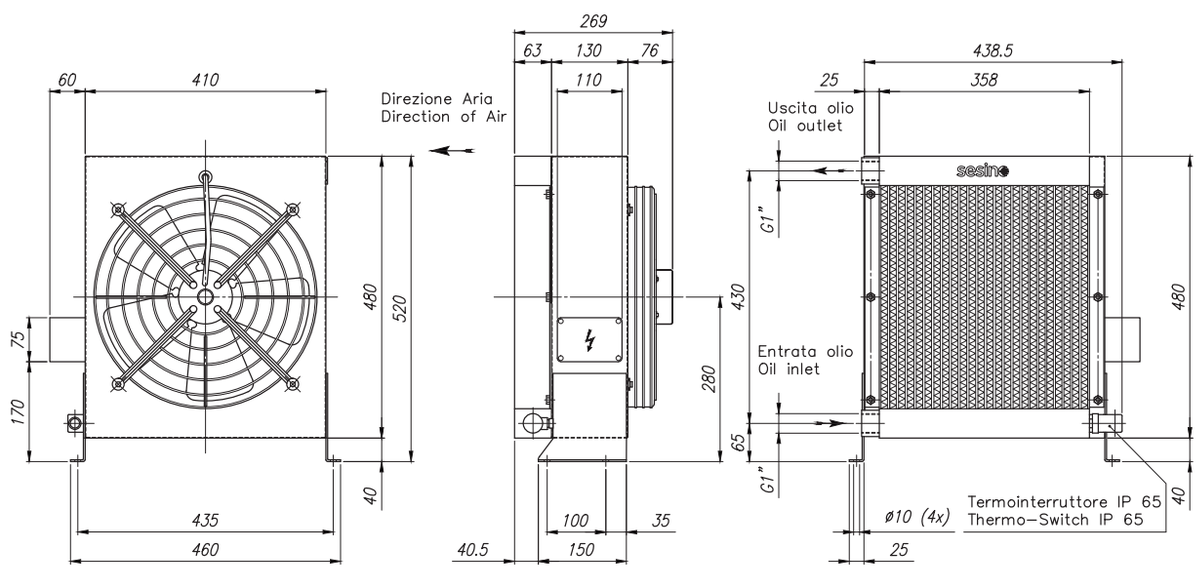

OIL FLOW	VOLTAGE	FREQUENCY	POWER	CURRENT	AIR FLOW	PROTECTION	NOISE LEVEL	WEIGHT	ø FAN
l/min	V	hz	W	A	m³/h	IP	dB(A)	kg	mm
50-250	Δ 230 Y 400	50	100/170	0,62/0,30	2.750	55	73	22	350
50-250	Δ 265 Y 460	60	100/180	0,50/0,29	2.750	55	73	22	350

BC 390 AC BY-PASS

PURCHASE CODES

BC 390 single phase without thermo switch	3RBC390BP
BC 390 single phase with thermo switch	3RBC390T247BP 3RBC390T260BP
BC 390 three phase without thermo switch	3RBC39038BP
BC 390 three phase with thermo switch	3RBC39038T247BP 3RBC39038T260BP

SPARE PARTS

Cooling element	1RO03381BP
Frame	3CNBC390M/T.1
Electric fan for BC 390 single phase	1VNA4E350
Electric fan for BC 390 three phase	1VNELCO43038DV1
Thermo-switch 47-36 IP 65	1TRM 47-36
Thermo-switch 60-49 IP 65	1TRM 60-49
By-pass	9FTBC

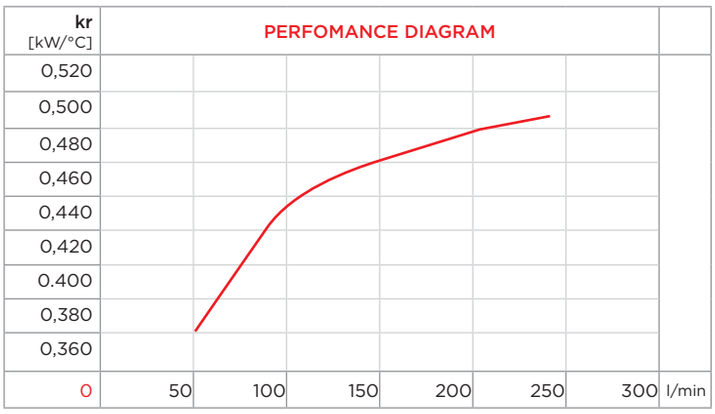

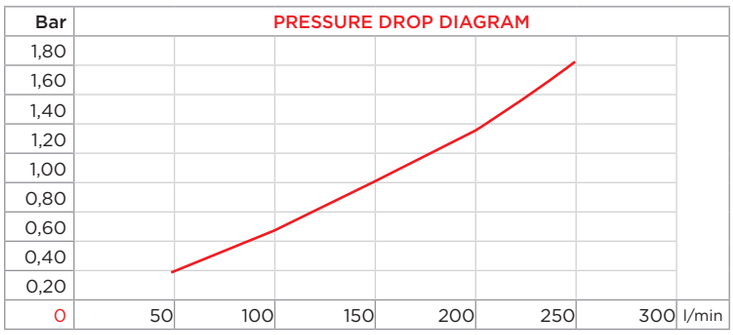

CORRECTION FACTOR							
cSt	22	30	46	68	100	150	220
f	0,6	1	1,5	2,3	3,5	5	7

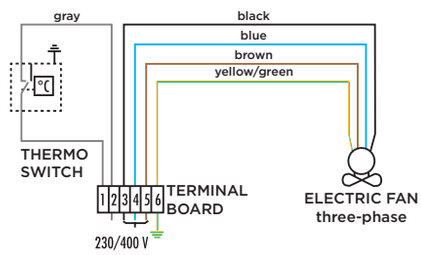

- Dimensions and technical characteristics are not binding

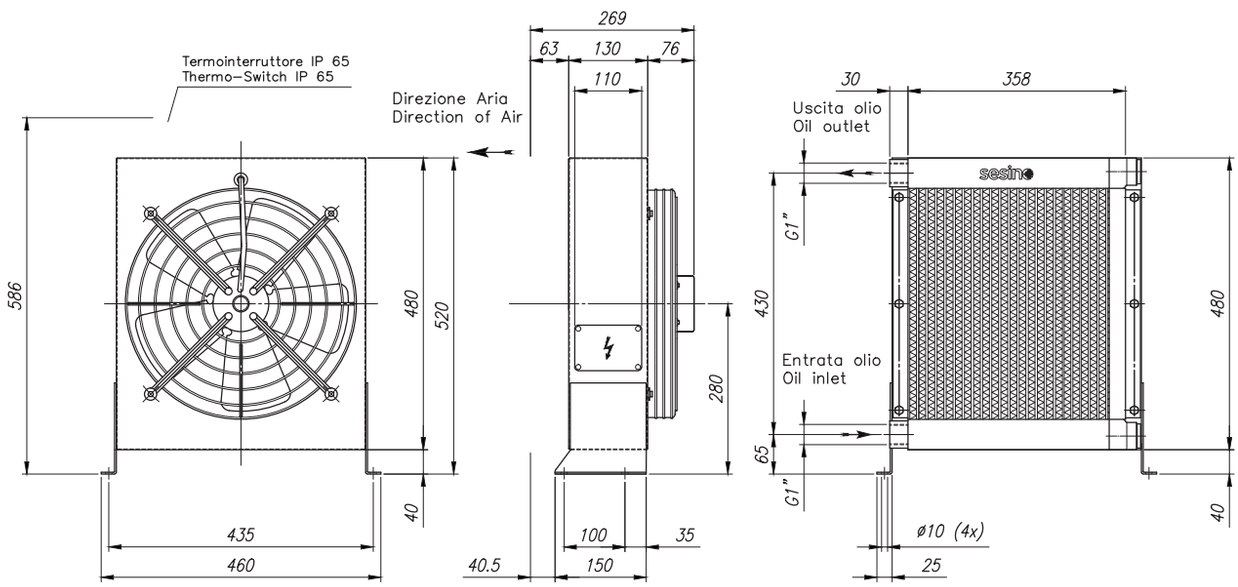

OIL FLOW	VOLTAGE	FREQUENCY	POWER	CURRENT	AIR FLOW	PROTECTION	NOISE LEVEL	WEIGHT	ø FAN
l/min	V	hz	W	A	m³/h	IP	dB(A)	kg	mm
50-250	Δ 230 Y 400	50	100/170	0,62/0,30	2.750	55	73	22	350
50-250	Δ 265 Y 460	60	100/180	0,50/0,29	2.750	55	73	22	350

BC 390/2 AC

PURCHASE CODES

BC 390/2 single phase without thermo switch	3RBC390/2
BC 390/2 single phase with thermo switch	3RBC390/2T247 3RBC390/2T260
BC 390/2 three phase without thermo switch	3RBC390/238
BC 390/2 three phase with thermo switch	3RBC390/238T247 3RBC390/238T260

SPARE PARTS

Cooling element	1RO03383
Frame	3CNBC390/2M/T.1
Electric fan for BC 250 single phase	1VNEASS400
Electric fan for BC 250 three phase	1VNELCO43238DV2
Thermo-switch 47-36 IP 65	1TRM 47-36
Thermo-switch 60-49 IP 65	1TRM 60-49

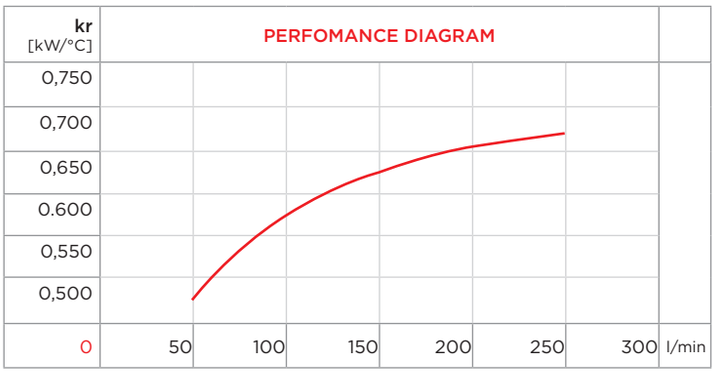

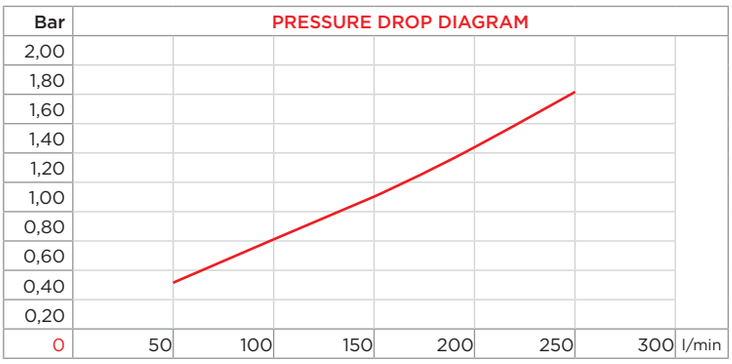

CORRECTION FACTOR							
cSt	22	30	46	68	100	150	220
f	0,6	1	1,5	2,3	3,5	5	7

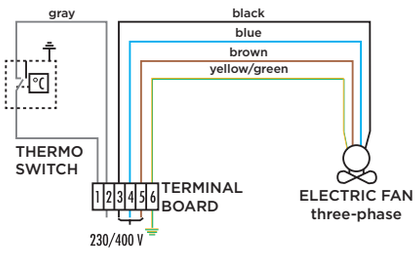

- Dimensions and technical characteristics are not binding

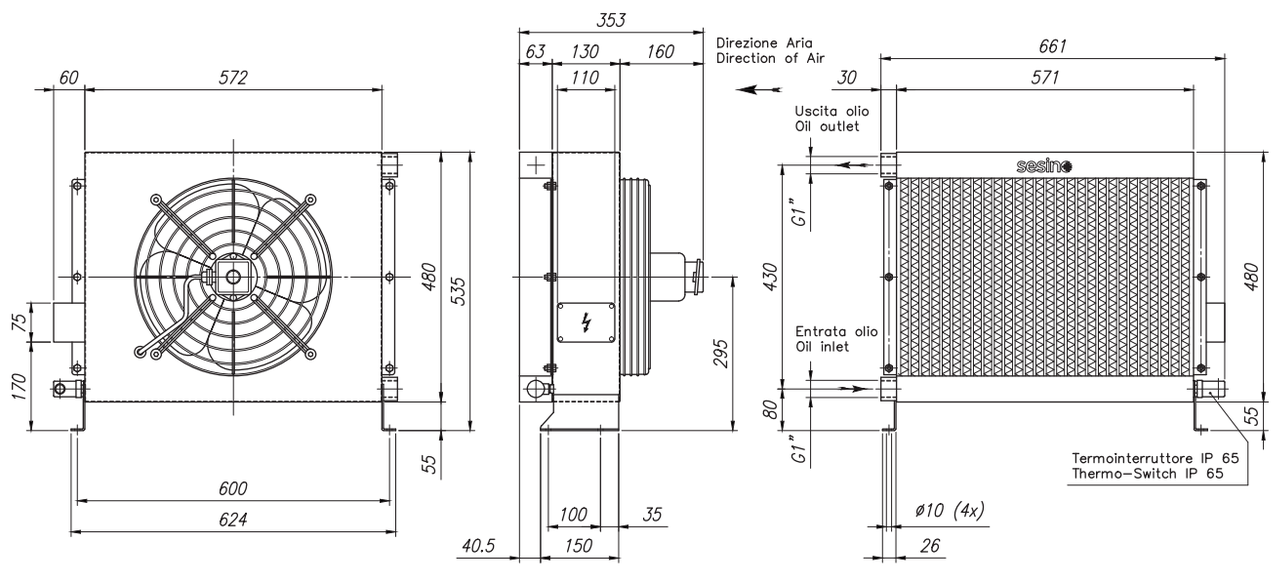

OIL FLOW	VOLTAGE	FREQUENCY	POWER	CURRENT	AIR FLOW	PROTECTION	NOISE LEVEL	WEIGHT	ø FAN
l/min	V	hz	W	A	m³/h	IP	dB(A)	kg	mm
50-250	Δ 230 Y 400	50	110/180	0,57/0,33	2.750	55	72	31	400
50-250	Δ 265 Y 460	60	145/260	0,68/0,39	3.300	55	73	31	400

BC 390/2 AC BY-PASS

PURCHASE CODES

BC 390/2 single phase without thermo switch	3RBC390/2BP
BC 390/2 single phase with thermo switch	3RBC390/2T247BP 3RBC390/2T260BP
BC 390/2 three phase without thermo switch	3RBC390/238BP
BC 390/2 three phase with thermo switch	3RBC390/238T247BP 3RBC390/238T260BP

SPARE PARTS

Cooling element	1RO03383BP
Frame	3CNBC390/2M/T.1
Electric fan for BC 390/2 single phase	1VNEASS400
Electric fan for BC 390/2 three phase	1VNELCO43238DV2
Thermo-switch 47-36 IP 65	1TRM 47-36
Thermo-switch 60-49 IP 65	1TRM 60-49
By-pass	9FTBC

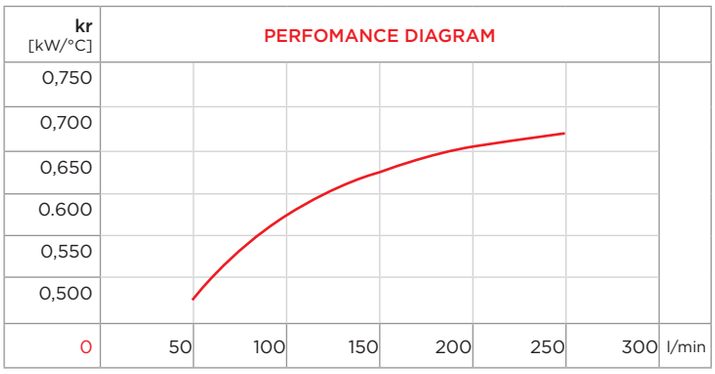

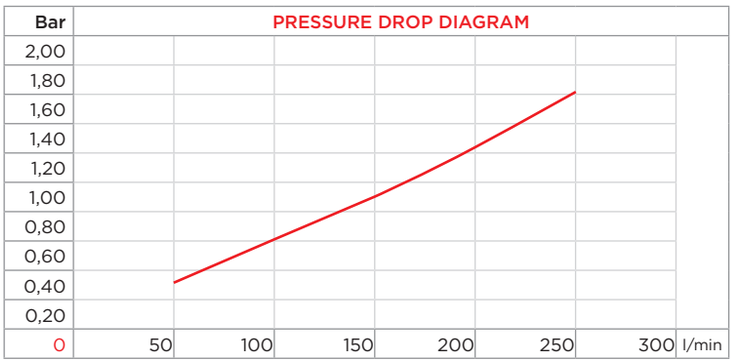

CORRECTION FACTOR							
cSt	22	30	46	68	100	150	220
f	0,6	1	1,5	2,3	3,5	5	7

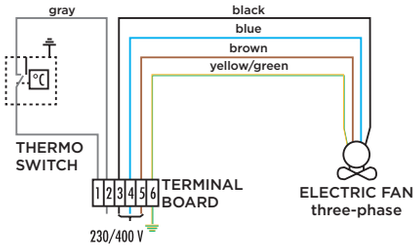

- Dimensions and technical characteristics are not binding

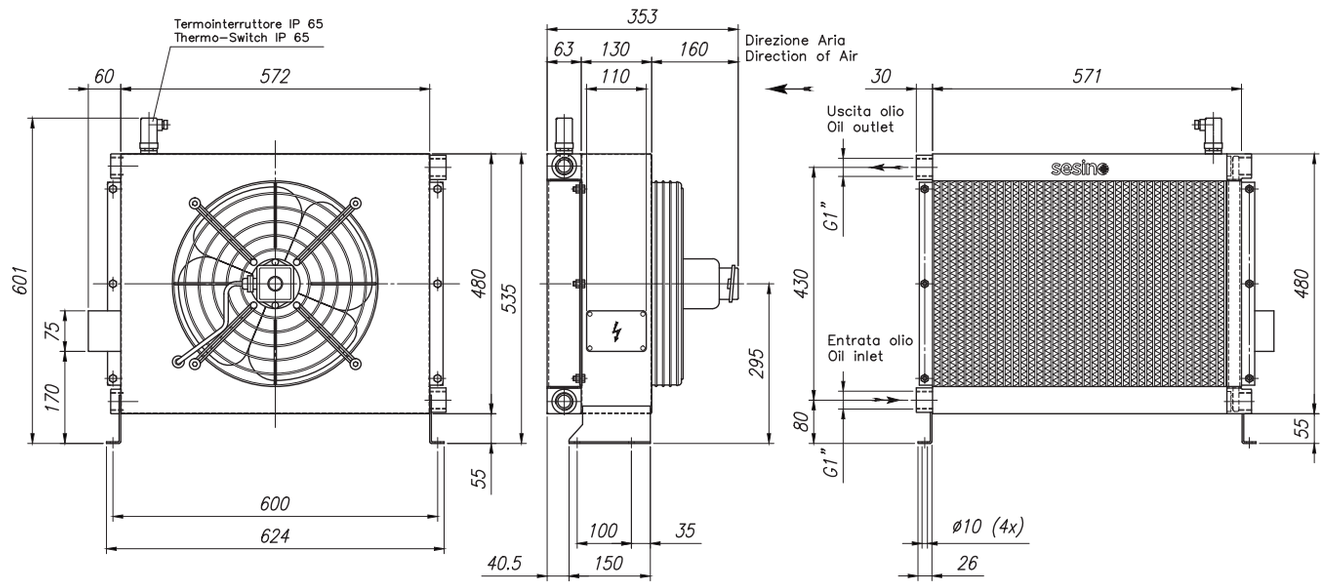

OIL FLOW	VOLTAGE	FREQUENCY	POWER	CURRENT	AIR FLOW	PROTECTION	NOISE LEVEL	WEIGHT	ø FAN
l/min	V	hz	W	A	m³/h	IP	dB(A)	kg	mm
50-250	Δ 230 Y 400	50	110/180	0,57/0,33	2.750	55	72	31	400
50-250	Δ 265 Y 460	60	145/260	0,68/0,39	3.300	55	73	31	400

BC 390/3 AC BY-PASS

PURCHASE CODES

BC 390/3 single phase without thermo switch	3RBC390/3BP
BC 390/3 single phase with thermo switch	3RBC390/3T247BP 3RBC390/3T260BP
BC 390/3 three phase without thermo switch	3RBC390/338BP
BC 390/3 three phase with thermo switch	3RBC390/338T247BP 3RBC390/338T260BP

SPARE PARTS

Cooling element	1RO14494BP
Frame	3CNBC390/3M/T.1
Electric fan for BC 390/2 single phase	1VNEASS400
Electric fan for BC 390/2 three phase	1VNELCO43238DV2
Thermo-switch 47-36 IP 65	1TRM 47-36
Thermo-switch 60-49 IP 65	1TRM 60-49
By-pass	9FTBC

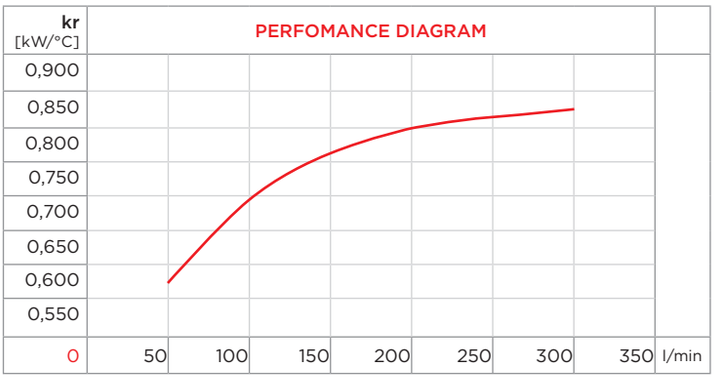

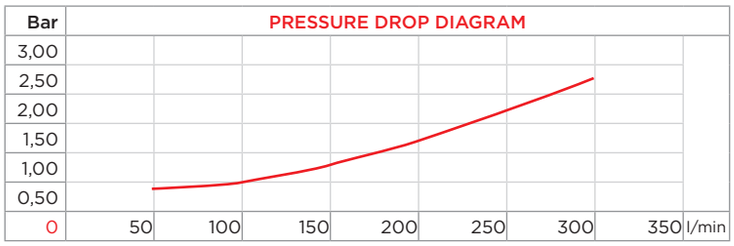

CORRECTION FACTOR							
cSt	22	30	46	68	100	150	220
f	0,6	1	1,5	2,3	3,5	5	7

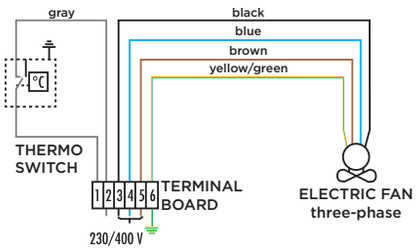

- Dimensions and technical characteristics are not binding

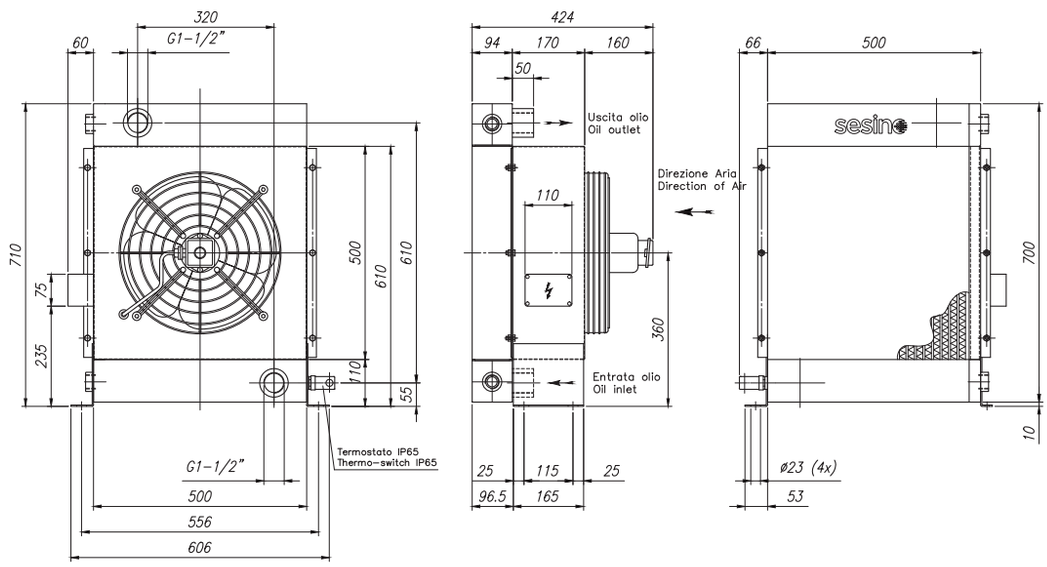

OIL FLOW	VOLTAGE	FREQUENCY	POWER	CURRENT	AIR FLOW	PROTECTION	NOISE LEVEL	WEIGHT	ø FAN
l/min	V	hz	W	A	m³/h	IP	dB(A)	kg	mm
50-300	Δ 230 Y 400	50	110/180	0,57/0,33	3.500	55	72	40	400
50-300	Δ 265 Y 460	60	145/260	0,68/0,39	4.800	55	72	40	400

BC 250 I

PURCHASE CODES

BC 250 I prepared	3RBC250I4A
BC 250 I with hydraulic motor	3RBC250I1A

SPARE PARTS

Cooling element	1RO03378
Frame	3CNAP300I.1
Hydraulic motor	1MO2/M16
Fan	1G2806230PAV
Fan grill	1RTAP300I
Thermo-switch 47-36 IP 65	1TRM 47-36
Thermo-switch 60-49 IP 65	1TRM 60-49

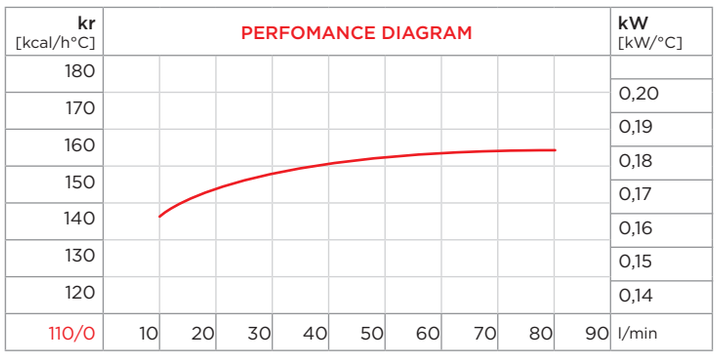

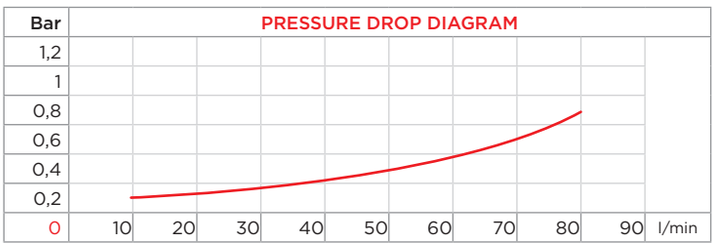

CORRECTION FACTOR							
cSt	22	30	46	68	100	150	220
f	0,6	1	1,5	2,3	3,5	5	7

- Dimensions and technical characteristics are not binding

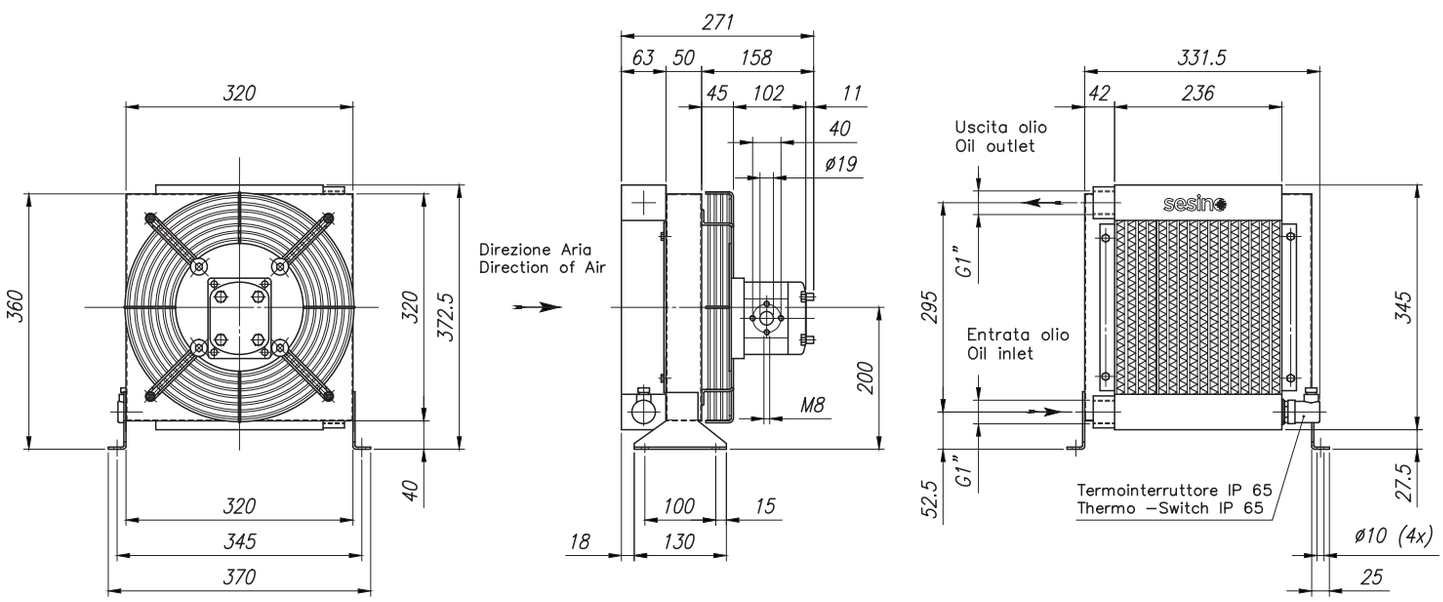

OIL FLOW	FAN SPEED	POWER	DISPLACEMENT	MOTOR FLOW	AIR FLOW	NOISE LEVEL	WEIGHT	ø FAN
l/min	rpm	W	cc/r	l/min	m³/h	dB(A)	kg	mm
20-150	2300	200	11,3	26	2.000	68	14	255

BC 250 I BY-PASS

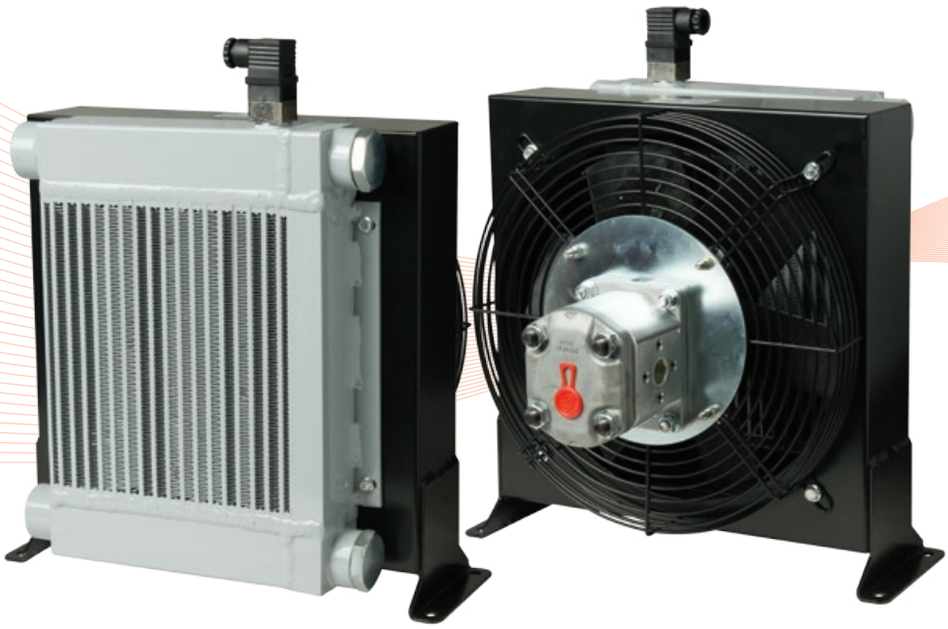

PURCHASE CODES

BC 250 I prepared	3RBC250I4ABP
BC 250 I with hydraulic motor	3RBC250I1ABP

SPARE PARTS

Cooling element	1RO03378BP
Frame	3CNAP300I.1
Hydraulic motor	1MO2/M16
Fan	1G2806230PAV
Fan grill	1RTAP300I
Thermo-switch 47-36 IP 65	1TRM 47-36
Thermo-switch 60-49 IP 65	1TRM 60-49
By-pass	9FTBC

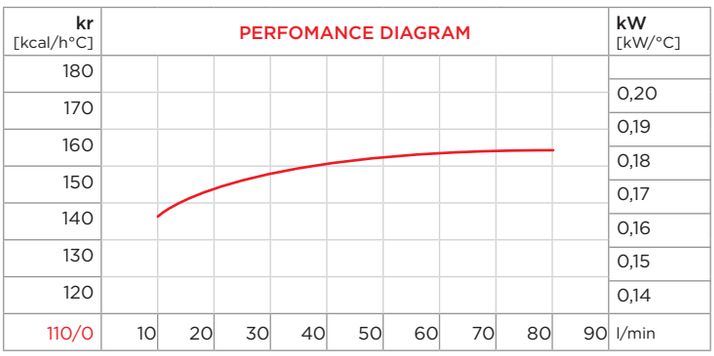

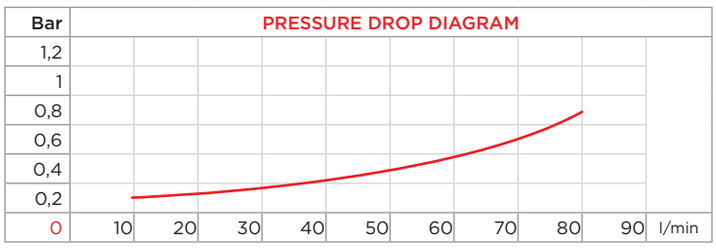

CORRECTION FACTOR							
cSt	22	30	46	68	100	150	220
f	0,6	1	1,5	2,3	3,5	5	7

- Dimensions and technical characteristics are not binding

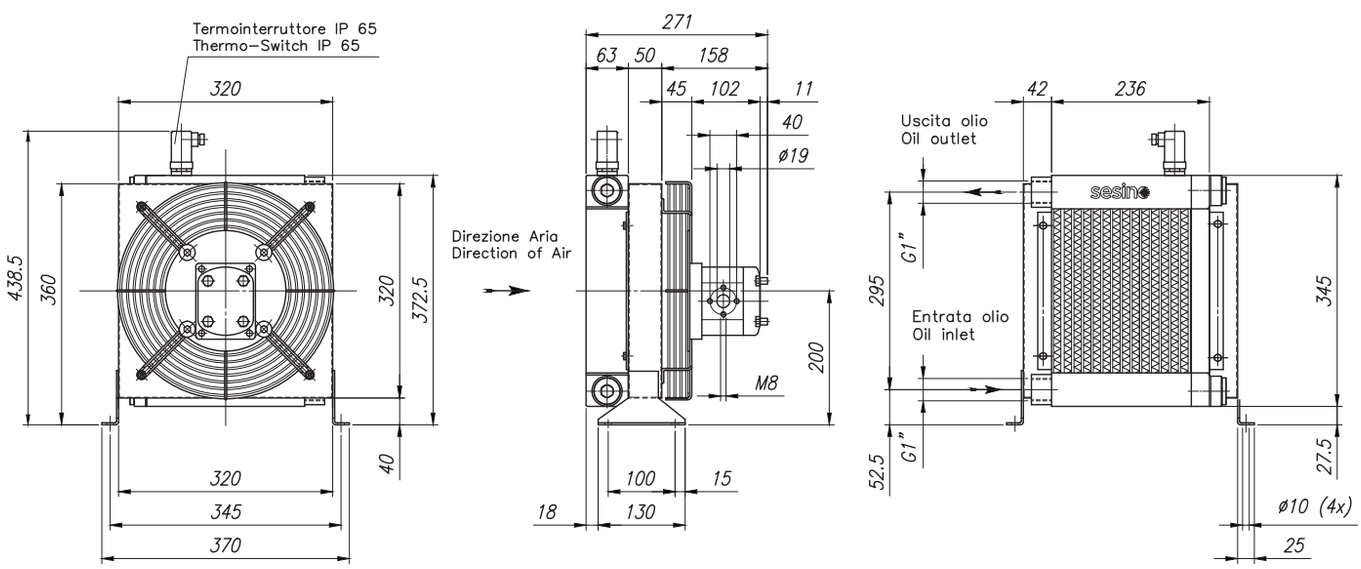

OIL FLOW	FAN SPEED	POWER	DISPLACEMENT	MOTOR FLOW	AIR FLOW	NOISE LEVEL	WEIGHT	ø FAN
l/min	rpm	W	cc/r	l/min	m³/h	dB(A)	kg	mm
20-150	2300	200	11,3	26	2.000	68	14	255

BC 250/2 I

PURCHASE CODES

BC 250/2 I prepared	3RBC250/2I4A
BC 250/2 I with hydraulic motor	3RBC250/2I1A

SPARE PARTS

Cooling element	1RO03378
Frame	3CNAP302I.1
Hydraulic motor	1MO2/M16
Fan	1G2806230PAV
Fan grill	1RTAP300I
Thermo-switch 47-36 IP 65	1TRM 47-36
Thermo-switch 60-49 IP 65	1TRM 60-49

PERFOMANCE DIAGRAM

kr [kcal/h°C]										kW [kW/°C]
230										0,26
220										0,25
210										0,24
200										0,23
190										0,22
180										0,21
170										0,2
160/0	20	40	60	80	100	120	140	160	180	l/min

PRESSURE DROP DIAGRAM

Bar										
0,9										
0,75										
0,6										
0,45										
0,3										
0,15										
0	20	40	60	80	100	120	140	160	180	l/min

CORRECTION FACTOR

cSt	22	30	46	68	100	150	220
f	0,6	1	1,5	2,3	3,5	5	7

- Dimensions and technical characteristics are not binding

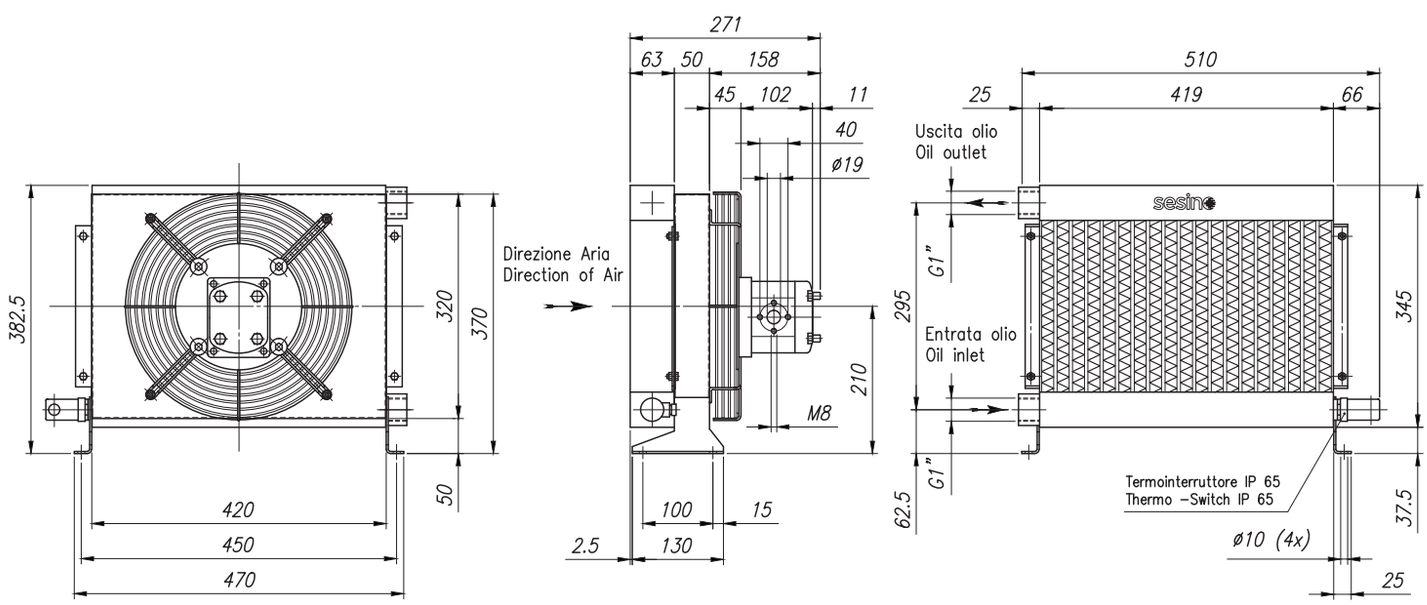

OIL FLOW	FAN SPEED	POWER	DISPLACEMENT	MOTOR FLOW	AIR FLOW	NOISE LEVEL	WEIGHT	ø FAN
l/min	rpm	W	cc/r	l/min	m³/h	dB(A)	kg	mm
30-180	2300	200	11,3	26	2.500	70	19	255

BC 250/2 I BY-PASS

PURCHASE CODES

BC 250/2 I prepared	3RBC250/2I4ABP
BC 250/2 I with hydraulic motor	3RBC250/2I1ABP

SPARE PARTS

Cooling element	1RO03378BP
Frame	3CNAP302I.1
Hydraulic motor	1MO2/M16
Fan	1G2806230PAV
Fan grill	1RTAP300I
Thermo-switch 47-36 IP 65	1TRM 47-36
Thermo-switch 60-49 IP 65	1TRM 60-49
By-pass	9FTBC

PERFOMANCE DIAGRAM

kr [kcal/h°C]										kW [kW/°C]
230										0,26
220										0,25
210										0,24
200										0,23
190										0,22
180										0,21
170										0,2
160/0	20	40	60	80	100	120	140	160	180	l/min

PRESSURE DROP DIAGRAM

Bar										
0,9										
0,75										
0,6										
0,45										
0,3										
0,15										
0	20	40	60	80	100	120	140	160	180	l/min

CORRECTION FACTOR

cSt	22	30	46	68	100	150	220
f	0,6	1	1,5	2,3	3,5	5	7

- Dimensions and technical characteristics are not binding

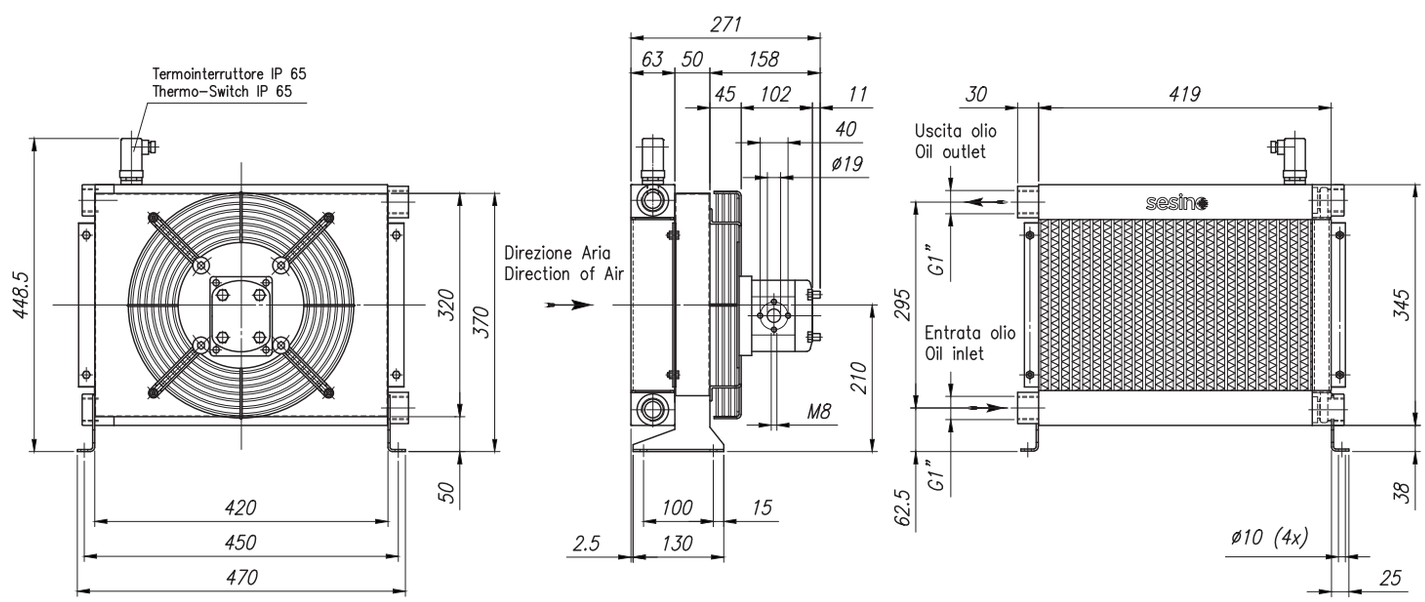

OIL FLOW	FAN SPEED	POWER	DISPLACEMENT	MOTOR FLOW	AIR FLOW	NOISE LEVEL	WEIGHT	ø FAN
l/min	rpm	W	cc/r	l/min	m³/h	dB(A)	kg	mm
30-180	2300	200	11,3	26	2.500	70	19	255

BC 390 I

PURCHASE CODES

BC 390 I prepared	3RBC390I4A
BC 390 I with hydraulic motor	3RBC390I1A

SPARE PARTS

Cooling element	1RO03381
Frame	3CNBC390I.1
Hydraulic motor	1MO2/M16
Fan	1G3506345PAV
Fan grill	1RTAP430I
Thermo-switch 47-36 IP 65	1TRM 47-36
Thermo-switch 60-49 IP 65	1TRM 60-49

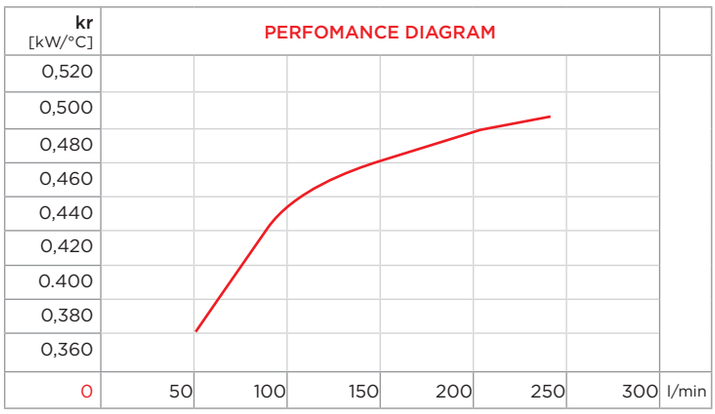

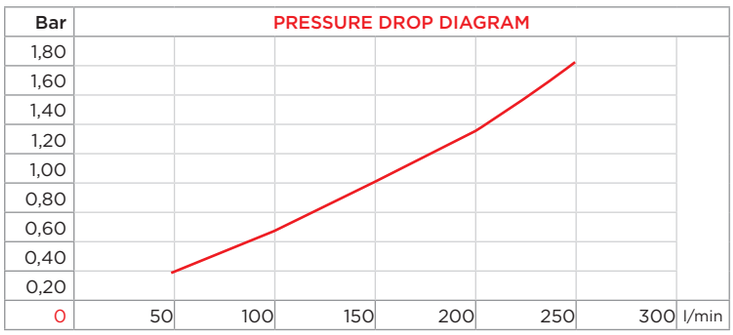

CORRECTION FACTOR							
cSt	22	30	46	68	100	150	220
f	0,6	1	1,5	2,3	3,5	5	7

- Dimensions and technical characteristics are not binding

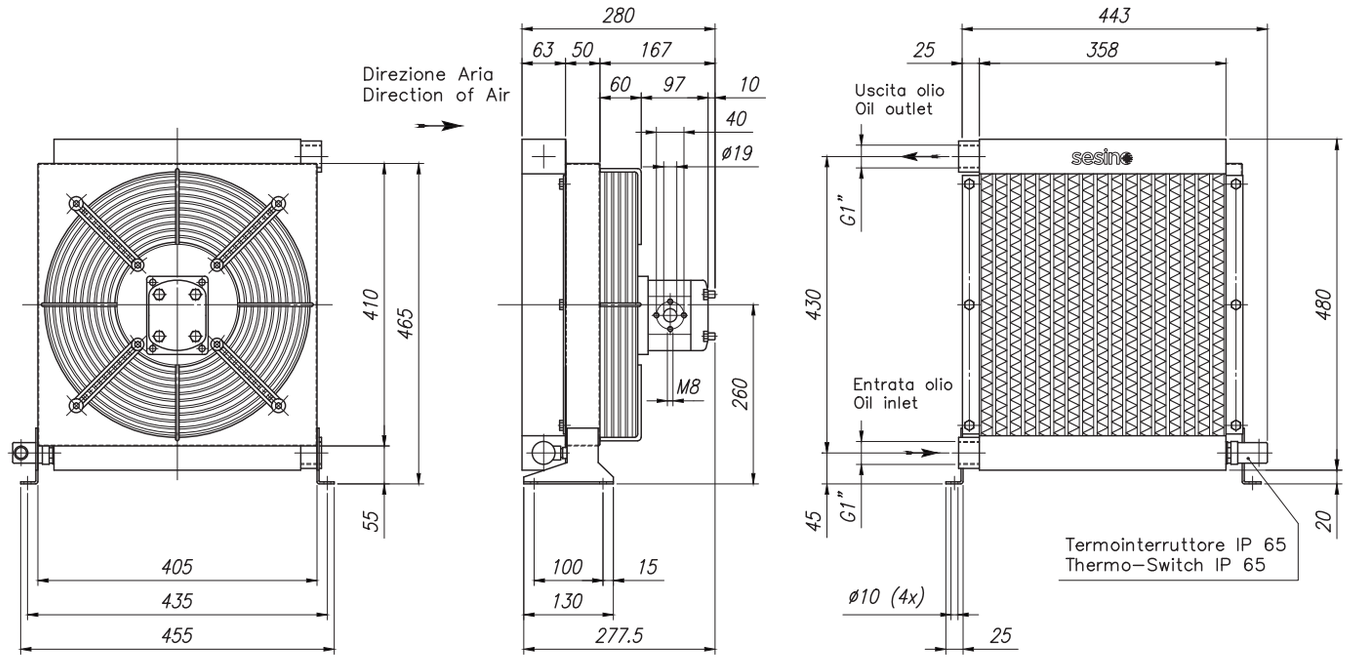

OIL FLOW	FAN SPEED	POWER	DISPLACEMENT	MOTOR FLOW	AIR FLOW	NOISE LEVEL	WEIGHT	ø FAN
l/min	rpm	W	cc/r	l/min	m³/h	dB(A)	kg	mm
50-250	2.700	770	11,3	31	7.000	73	21	355

BC 390 I BY-PASS

PURCHASE CODES

BC 390 I prepared	3RBC390I4ABP
BC 390 I with hydraulic motor	3RBC390I1ABP

SPARE PARTS

Cooling element	1RO03381BP
Frame	3CNBC390I.1
Hydraulic motor	1MO2/M16
Fan	1G3506345PAV
Fan grill	1RTAP430I
Thermo-switch 47-36 IP 65	1TRM 47-36
Thermo-switch 60-49 IP 65	1TRM 60-49
By-pass	9FTBC

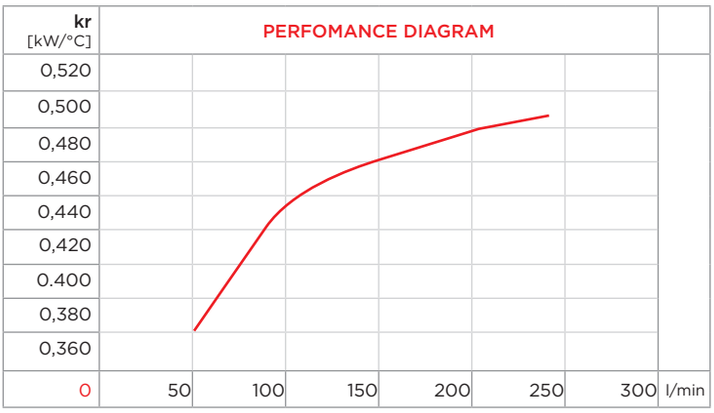

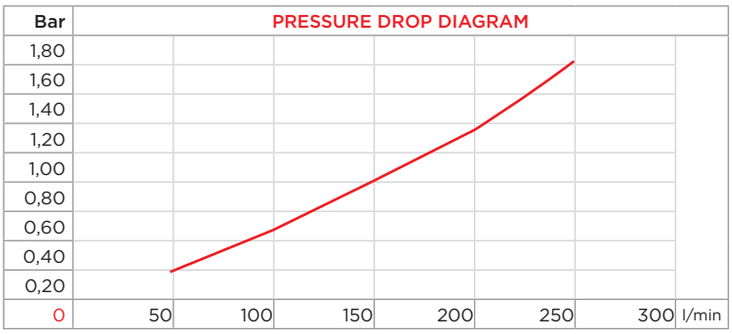

CORRECTION FACTOR							
cSt	22	30	46	68	100	150	220
f	0,6	1	1,5	2,3	3,5	5	7

- Dimensions and technical characteristics are not binding

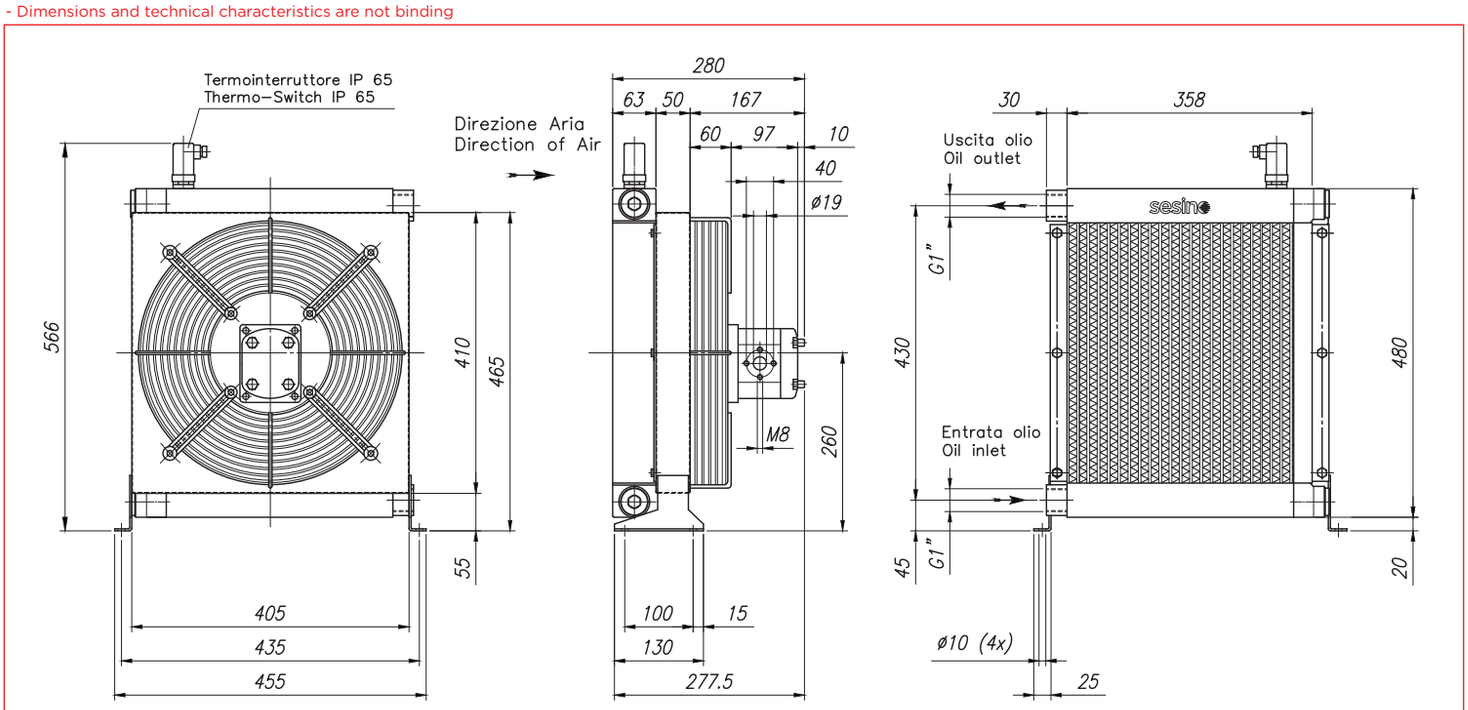

OIL FLOW	FAN SPEED	POWER	DISPLACEMENT	MOTOR FLOW	AIR FLOW	NOISE LEVEL	WEIGHT	ø FAN
l/min	rpm	W	cc/r	l/min	m³/h	dB(A)	kg	mm
50-250	2.700	830	11,3	31	7.000	74	23	400

BC 390/2 I

PURCHASE CODES

BC 390/2 I prepared	3RBC390/2I4A
BC 390/2 I with hydraulic motor	3RBC390/2I1A

SPARE PARTS

Cooling element	1RO03383
Frame	3CNBC390/2I.1
Hydraulic motor	1MO2/M16
Fan	1G40010345PAV
Fan grill	1RTAP580I
Thermo-switch 47-36 IP 65	1TRM 47-36
Thermo-switch 60-49 IP 65	1TRM 60-49

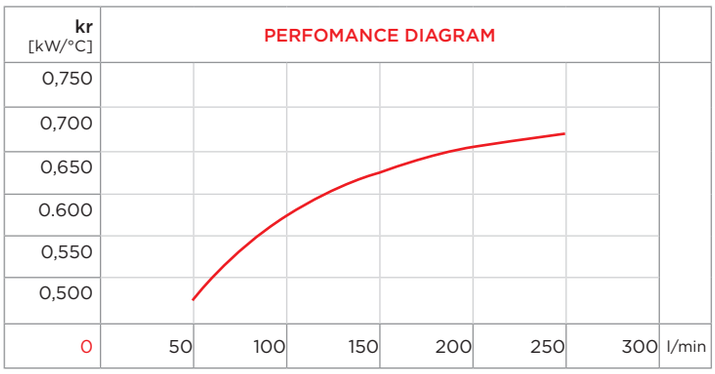

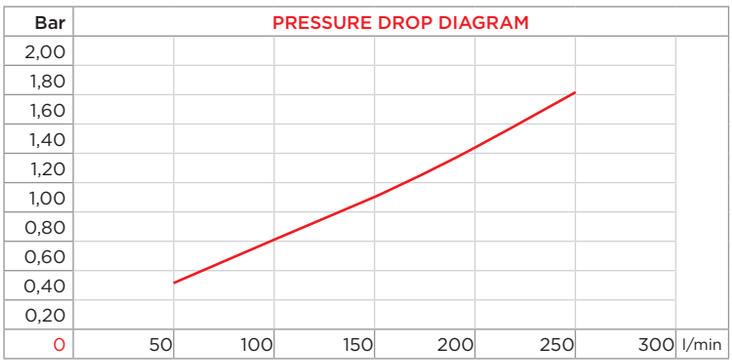

CORRECTION FACTOR							
cSt	22	30	46	68	100	150	220
f	0,6	1	1,5	2,3	3,5	5	7

- Dimensions and technical characteristics are not binding

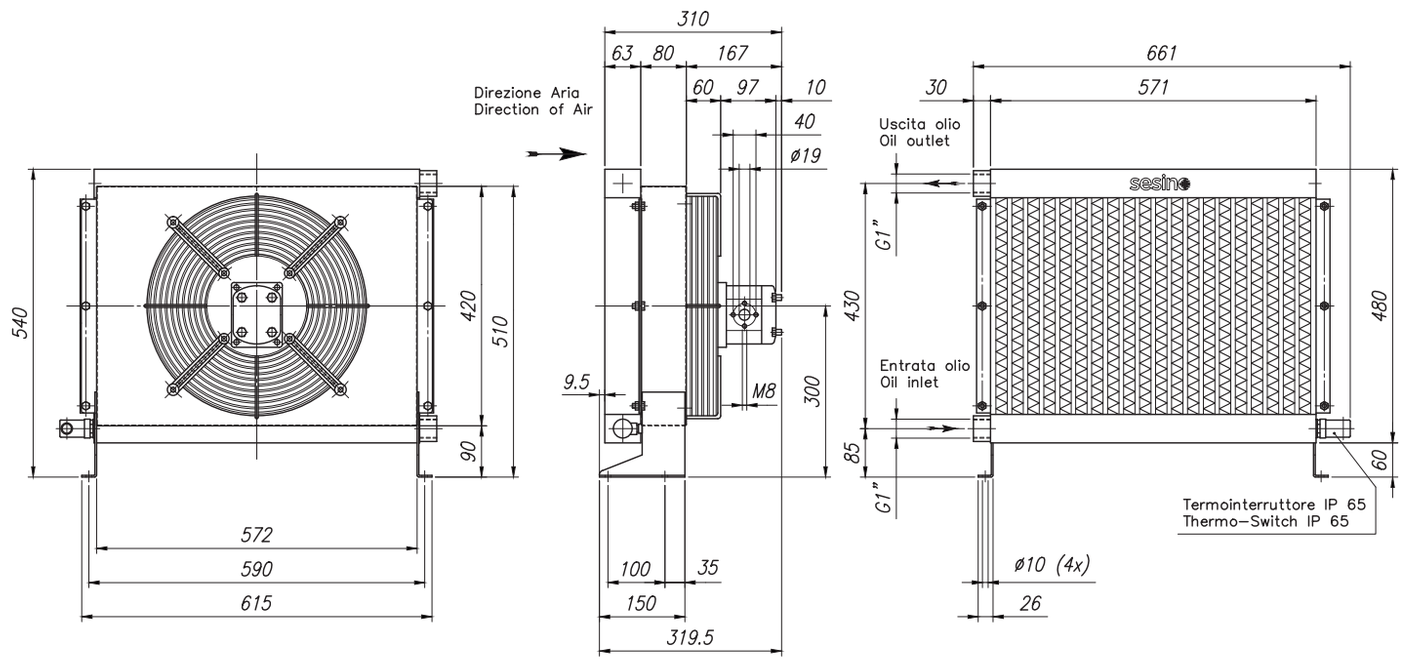

OIL FLOW	FAN SPEED	POWER	DISPLACEMENT	MOTOR FLOW	AIR FLOW	NOISE LEVEL	WEIGHT	ø FAN
l/min	rpm	W	cc/r	l/min	m³/h	dB(A)	kg	mm
50-250	2.700	770	11,3	31	7.000	73	29	355

BC 390/2 I BY-PASS

PURCHASE CODES

BC 390/2 I prepared	3RBC390/2I4ABP
BC 390/2 I with hydraulic motor	3RBC390/2I1ABP

SPARE PARTS

Cooling element	1RO03383BP
Frame	3CNBC390/2I.1
Hydraulic motor	1MO2/M16
Fan	1G40010345PAV
Fan grill	1RTAP580I
Thermo-switch 47-36 IP 65	1TRM 47-36
Thermo-switch 60-49 IP 65	1TRM 60-49
By-pass	9FTBC

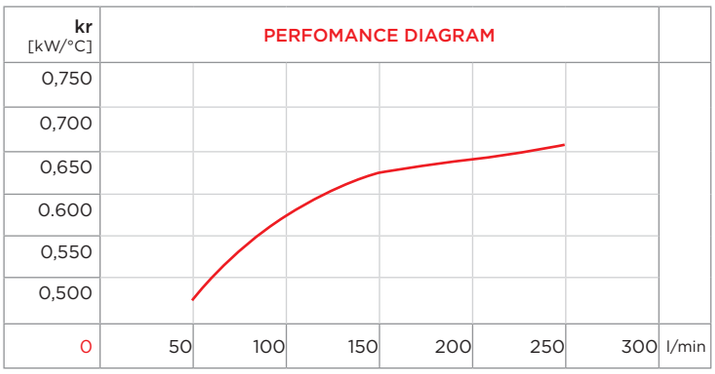

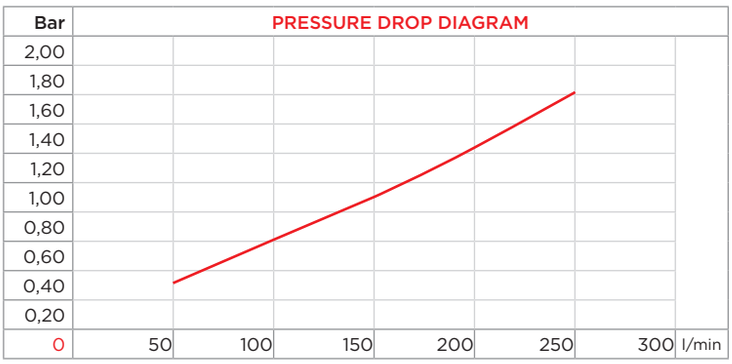

CORRECTION FACTOR							
cSt	22	30	46	68	100	150	220
f	0,6	1	1,5	2,3	3,5	5	7

- Dimensions and technical characteristics are not binding

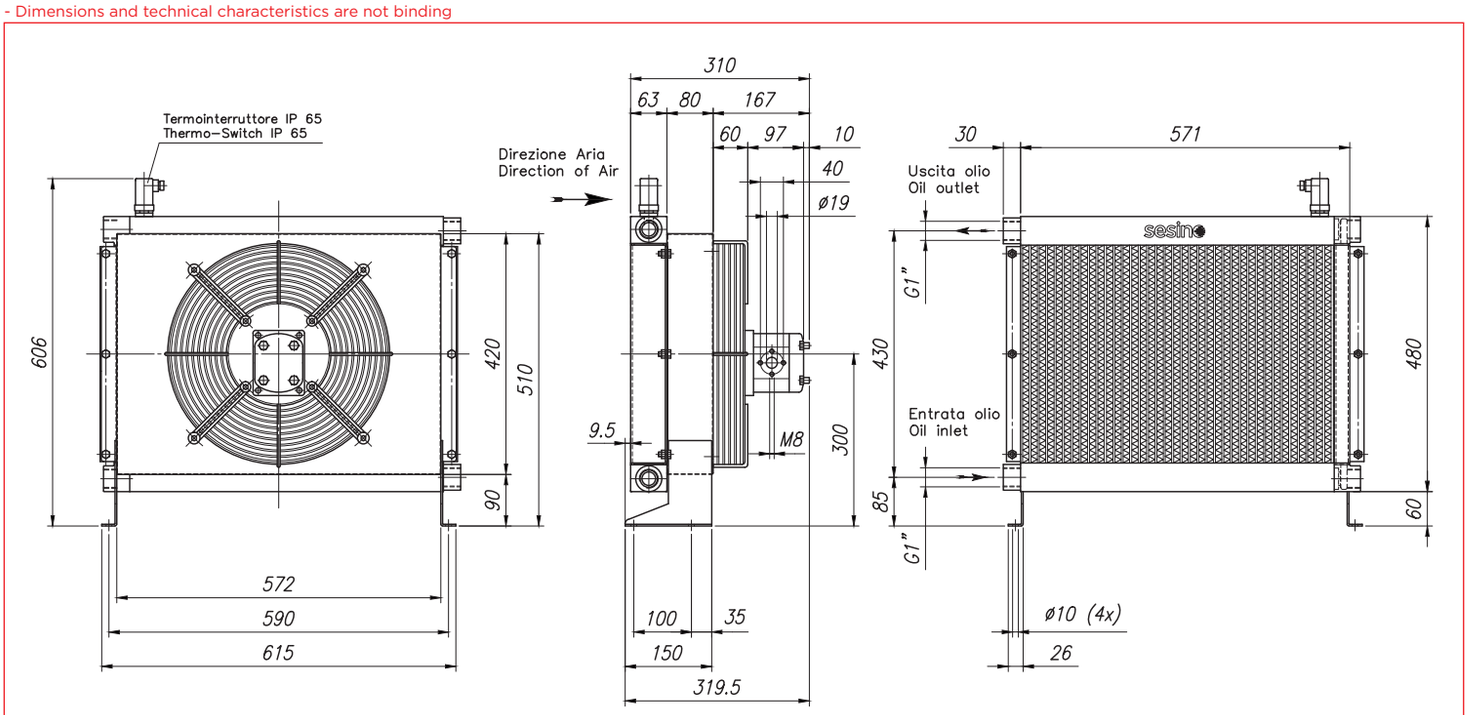

OIL FLOW	FAN SPEED	POWER	DISPLACEMENT	MOTOR FLOW	AIR FLOW	NOISE LEVEL	WEIGHT	ø FAN
l/min	rpm	W	cc/r	l/min	m³/h	dB(A)	kg	mm
50-250	2.700	830	11,3	31	7.000	74	29	400

BC 390/3 I BY-PASS

PURCHASE CODES

BC 390/3 I prepared	3RBC390/3I4ABP
BC 390/3 I with hydraulic motor	3RBC390/3I1ABP

SPARE PARTS

Cooling element	1RO14494BP
Frame	3CNBC390/3I.1
Hydraulic motor	1MO2/M16
Fan	1G40010345PAV
Fan grill	1RTAP580I
Thermo-switch 47-36 IP 65	1TRM 47-36
Thermo-switch 60-49 IP 65	1TRM 60-49
By-pass	9FTBC

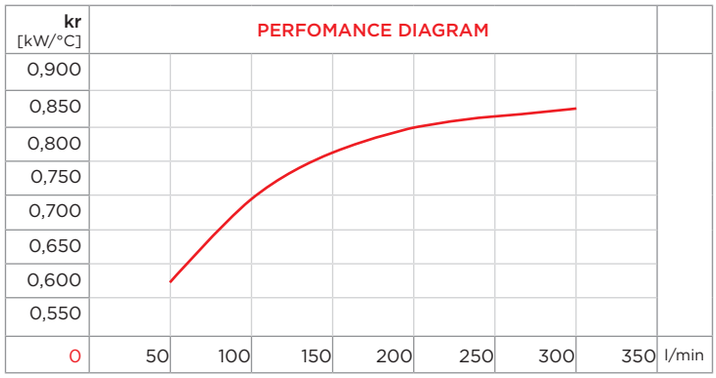

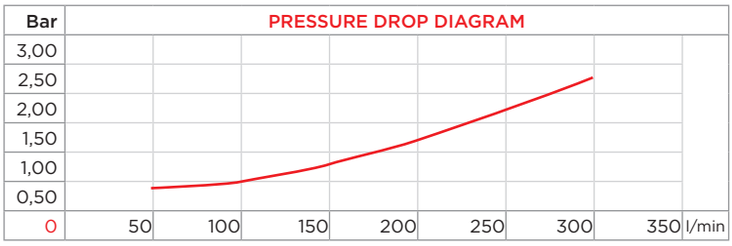

CORRECTION FACTOR							
cSt	22	30	46	68	100	150	220
f	0,6	1	1,5	2,3	3,5	5	7

- Dimensions and technical characteristics are not binding

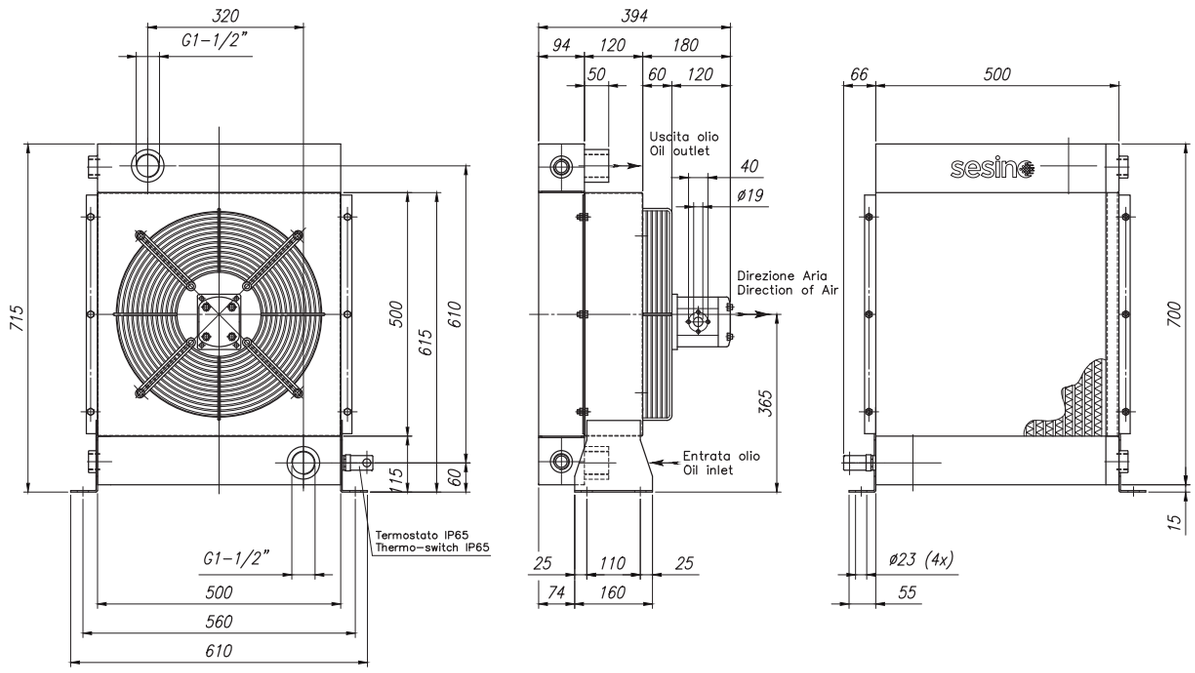

OIL FLOW	FAN SPEED	POWER	DISPLACEMENT	MOTOR FLOW	AIR FLOW	NOISE LEVEL	WEIGHT	ø FAN
l/min	rpm	W	cc/r	l/min	m³/h	dB(A)	kg	mm
50-300	2.250	880	11,3	26	8.000	78	38	400

AGENTS & DISTRIBUTORS

ITALY

LOMBARDIA & PIEMONTE
COMPANY: Roberto Ginestri Rappresentanze
CONTACT: Roberto Ginestri
ADDRESS: Via G.Falcone 21
24042 Capriate San Gervasio - Bergamo
PH.: 02 9092636 MOB.: 335-6954778
E-MAIL: info@robertoginestrirappresentanze.it
roberto@robertoginestrirappresentanze.it

TRE VENEZIE
COMPANY : Roberto Ginestri Rappresentanze
CONTACT: Giovanni Fiorendi
ADDRESS: Via G.Falcone 21
24042 Capriate San Gervasio - Bergamo
PH.: 02 9092636 MOB.: 335-8304811
E-MAIL: info@robertoginestrirappresentanze.it
giovanni@robertoginestrirappresentanze.it

EMILIA ROMAGNA
COMPANY: F.lli Cavazzoni Rappresentanze Di Cav. D & M Snc
CONTACT: Cavazzoni Davide e Cavazzoni Matteo
ADDRESS: Via Muzza Corona 45
41013 Castelfranco Emilia - Modena
PH.: 059924076
MOB.: Sig Davide : 335494410
Sig. Matteo: 3355491792 FAX: 059925442
E-MAIL: flli_cavazzoni@hotmail.com

LIGURIA & TOSCANA
COMPANY: Di Zeta
CONTACT: Sig. Della Zoppa Osvaldo
ADDRESS: Via Ferruccio 26 – 19121 La Spezia
PH.: 0187- 257670 MOB.: 339-2239419
FAX: 0187- 736480
E-MAIL: odellazoppa@libero.it

MARCHE ABRUZZO UMBRIA
COMPANY: ELISEI ALDO
CONTACT: Sig. Elisei Aldo
ADDRESS: Via Monturanese 1321
63019 Sant'Elpidio A Mare
PH.: 0734-817956 MOB.: 335-5717854
FAX: 0734-817958
E-MAIL: eliseialdo@tiscalinet.it

LAZIO CAMPANIA
COMPANY: DE MARTINO DAVIDE
CONTACT: Sig. De Martino Davide
ADDRESS: Via Palmiro Togliatti 19
80046 San Giorgio a Cremano
MOB.: 339-6872623
E-MAIL: info@demartinorappresentanze.com

WORLD

PORTUGAL
COMPANY: Cudell - Engenharia & Serviços L.da
CONTACT: Mr. Vitor Silva
ADDRESS: R. Eng. Ferreira Dias, 954
4149-008 Porto
PH.: 00351-22-6158029 FAX: 00351-22-6158011
E-MAIL: info-e+s@cudellengenharia.pt
WEB: www.cudellengenharia.pt

SPAIN
COMPANY: Salvador Santos Santino
CONTACT: Sig. Salvador Santos Santino
ADDRESS: C/Hernan Cortes, 2 Urb. Can Vidal
08756 La Palma De Cervello - Barcelona
PH.: 0034936720878 MOB.: 0034-606394339
FAX: 0034-936720765
E-MAIL: santos58@telefonica.net

FRANCE
COMPANY: Socah Division Hydraulique
CONTACT: Mr Jérôme Cabanis
ADDRESS: Zi-Plessis Beucher 35116 Chateaubourg Cedex
PH.: 0033 299007674 FAX: 0033 272560190
E-MAIL: contact@socah-hydraulique.fr
WEB: www.socah-hydraulique.fr

HOLLAND
COMPANY: Hytres B.V.
CONTACT: Mr. Donné Welling
ADDRESS: Innovatieweg 15
7007 Cd Doetinchem
PH.: 0031314390540 FAX: 0031314390902
E-MAIL: donne@hytres.com / info@hytres.com
WEB: www.hytres.com

BELGIUM
COMPANY: Eriks +Baudoin
CONTACT: Mr. Jeroen Nijs
ADDRESS: Bollinckxstraat 213
BE 1070 Anderlecht
PH.: 0032-2555 0676 FAX: 0032-2523 2627
E-MAIL: Jeroen.Nijs@eriks.be
WEB: www.eriksbaudoin.be

ENGLAND
COMPANY: ISIS Fluid Control Ltd
CONTACT: Mr Peter Wright
ADDRESS: Station yard, The Leys Chipping Norton
Oxford Shire OX7 5HZ UK
PH.: 0044 1608645755 FAX: 0044 1608645532
E-MAIL: sales@isis-fluid.com
WEB: www.isis-fluid.co.uk

GERMANY
COMPANY: Si Service Italia
CONTACT: Mr.Alessandro Carbonaro
ADDRESS: Lange Strasse 114 Plais Faber
76530 Baden Baden
PH.: 0049-7221-394751 MOB.: 0049-1727271199
FAX: 0049-7221-394752
E-MAIL: serviceitalia@t-online.de

NORWAY
COMPANY: Maskin K.Lund Storm Martens
CONTACT: Mr. Knut Runar Hoffstuen
ADDRESS: POSTBOKS 21
KALBAKKEN 0901 - OSLO
PH.: 004722900200-24 FAX: 004722900201
E-MAIL: firmapost@mklsm.no
WEB: www.mklsm.no

AUSTRIA
COMPANY: Racher Gmbh Maschinen-Hydraulik
CONTACT: Mr. Josef Reiter
ADDRESS: Gewerbepark Mitte 1
A-4846 Redlham
PH.: 0043-7674 606 FAX: 0043-7674 60622
E-MAIL: info@racher.at WEB: www.racher.at

POLAND
COMPANY: Argo Hytos Polska Sp.Z.O.O.
ADDRESS: Ul.Kochanowskiego 3
Pl-34-100 Wadowice
PH.: 0048-33-8731652 FAX: 0048-33-8731915
E-MAIL: info@argo-hytos.pl
WEB: www.argo-hytos.pl

GREECE
COMPANY: Athens Hydrodynamic S.A.
CONTACT: Mrs. Soula Gardika
ADDRESS: 56, Athinon Avenue, Athens
PH.: 0030-210 5221155 FAX: 0030-210 5221485
E-MAIL: hydrodyn@atenet.gr
WEB: en.athenshydrodynamic.gr

TURKEY
COMPANY: MTD Engineering Systems
CONTACT: Mr. Murat Onur
ADDRESS: Merter Is Merkezi
K:4 No:28 E-5 Karayolu
Uzeri - Cirpici Cikmazi- 34169 Merter
Istanbul - Turkiye
E-Mail: info@sesino-tr.com

RUSSIA
COMPANY: Hydront OOO
CONTACT: Mrs. Daria Piankova, Mrs. Elena Barmina
ADDRESS: Lunacharskogo Str.31
620219 Ekaterinburg
PH.: 0073433535941 FAX. 0073433535941
E-MAIL: info@hydront.ru WEB: www.hydront.ru

CHINA
COMPANY: HST Fluid Power Control Co. Ltd
CONTACT: Mr. Jin Gao Xing
ADDRESS: 76 Bldg N.4855 Guangfulin Rd
Songjiang District - 201616 Shanghai
PH.: 0086-21-57652953 FAX: 0086-21-57655112
E-MAIL: jinhst@sh163.net

SOUTH KOREA
COMPANY: Fluen Co. Ltd.
CONTACT: Mr. Jeremy Park/ Mrs Liz Bae
ADDRESS: 425,Yuha-Ri,Jangyu-Myeon Gimhae-Si - Gyeongnam, Korea 621-834
PH.: 0082 553335613 FAX: 0082 553335615
E-MAIL: jypark@fluen.co.kr/ghbae@fluen.co.kr
WEB: www.fluen.com

SOUTH AFRICA
COMPANY: Hytec Fluid Technology (Pty) Ltd
CONTACT: Mr. Olaf Voigt
ADDRESS: P O Box 538 - Edenvale 1610
PH.: 0027-115735400 FAX: 0027- 828078910
E-MAIL: olaf.voigt@hft.co.za WEB: www.hft.co.za

THAILAND
COMPANY: Thai Agency Engineering Co., Ltd.
CONTACT: Mrs. Anna / Mrs. Kanjana
ADDRESS: 9 Vorasin Bldg., 2nd-3rd Fl. - Vipavadirangsit Rd, Chomphon, 10900 - Jatujak, Bangkok
PH.: 0066-26915900 FAX: 0066-26915820
E-MAIL: taec@thai-a.co.th WEB: www.thai-a.com

ISRAEL
COMPANY: J.Bivas Hydraulik Equipment & Acc.Ltd
CONTACT: Mr. Yossi Bivas
ADDRESS: 8 Ravnitzki St. Segula Industrial Area
49277 Petach Tikva
PH.: 00972-3-9045565 FAX: 00972-3-9045549
E-MAIL: Y.Bivas@bivas.co.il WEB: www.bivas.co.il

SAUDI ARABIA
COMPANY: Metal Work
ADDRESS: P.O.Box 14311 Kilo 10,Al Malek Obhor Roa - 21424 Jeddah
PH.: 00966-2-6990222 FAX: 00966-2-6990355

SINGAPORE
COMPANY:TMJ Marketing Pte Ltd
CONTACT: Mr. Poh Leong Heng
ADDRESS: Blk.28-F-Penjuru Close-#01-09° - Singapore 609134
PH.: 0065-62666466 FAX: 0065-626667662
E-MAIL: sales@tmj.com.sg WEB: www.tmj.com.sg

SWITZERLAND
COMPANY: Girmatic AG
CONTACT: Mr. Roger Allenspach
ADDRESS: Badstrasse 14 – 8590 Romanshorn
PH.: 0041-71 4661515 FAX: 0041-71 4661500
E-MAIL: info@girmatic.ch WEB: www.girmatic.ch

UNITED ARAB EMIRATES
COMPANY: GLOBETECH HYDRAULIC TRADING LLC
CONTACT: Mr. Alessandro Mirabella
ADDRESS: Al Quoz 3 - Dubai
UNITED ARAB EMIRATES
E-MAIL: sales@globetechllc.net

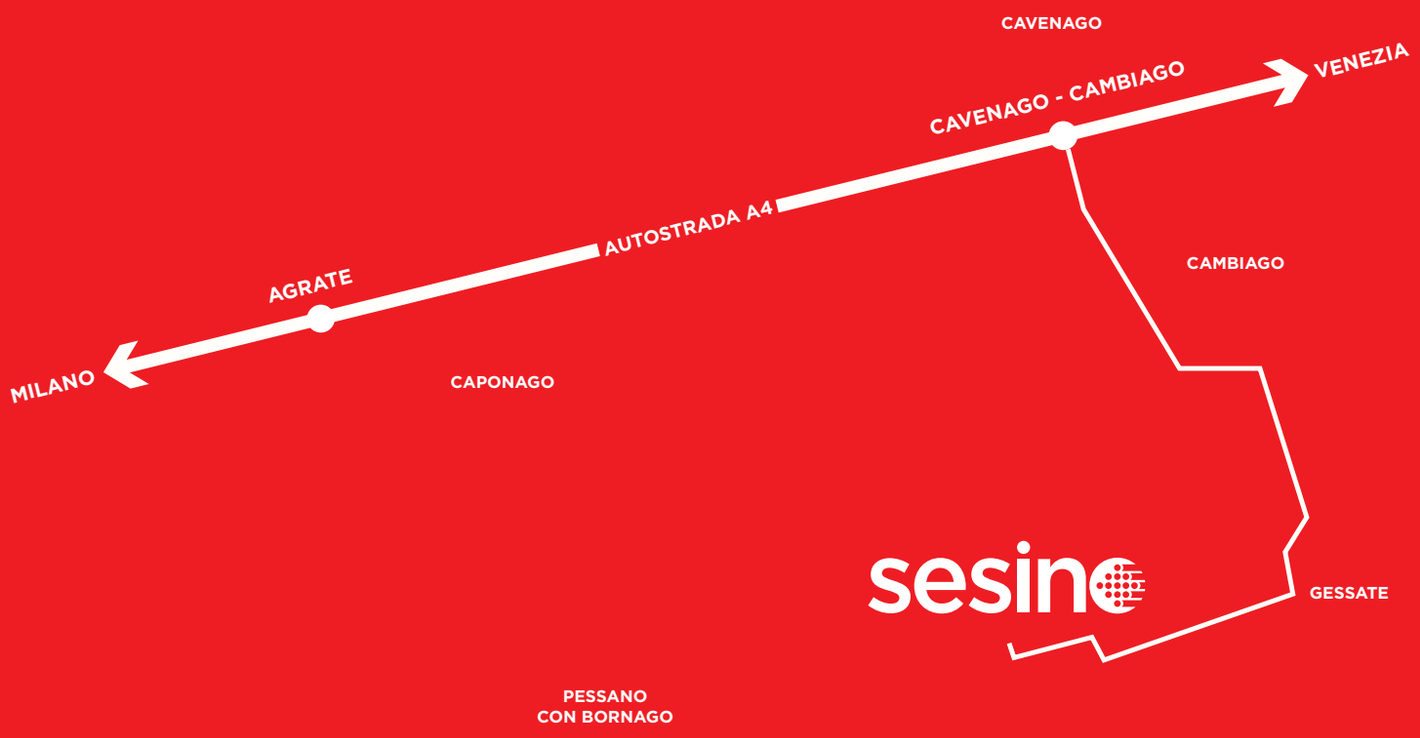

Scan the following
QR Code to find us:

Edition: April 2016
Art direction, photography & graphic design: Flywheel s.r.l. www.flywheel.it


flywheel.it
sesino
HEAT EXCHANGING EXCELLENCE SINCE 1919
COSTANTE SESINO SPA: via Monza, 150 A/B 20060 GESSATE (MI)
info@sesino.com - www.sesino.com | tel. +39 02.95.38.03.34 - fax +39 02.95.78.05.28
ACM
UKAS
Quality Management System
OHSAS
LL.C (Certification)
Occupational Health and Safety Assessment Series